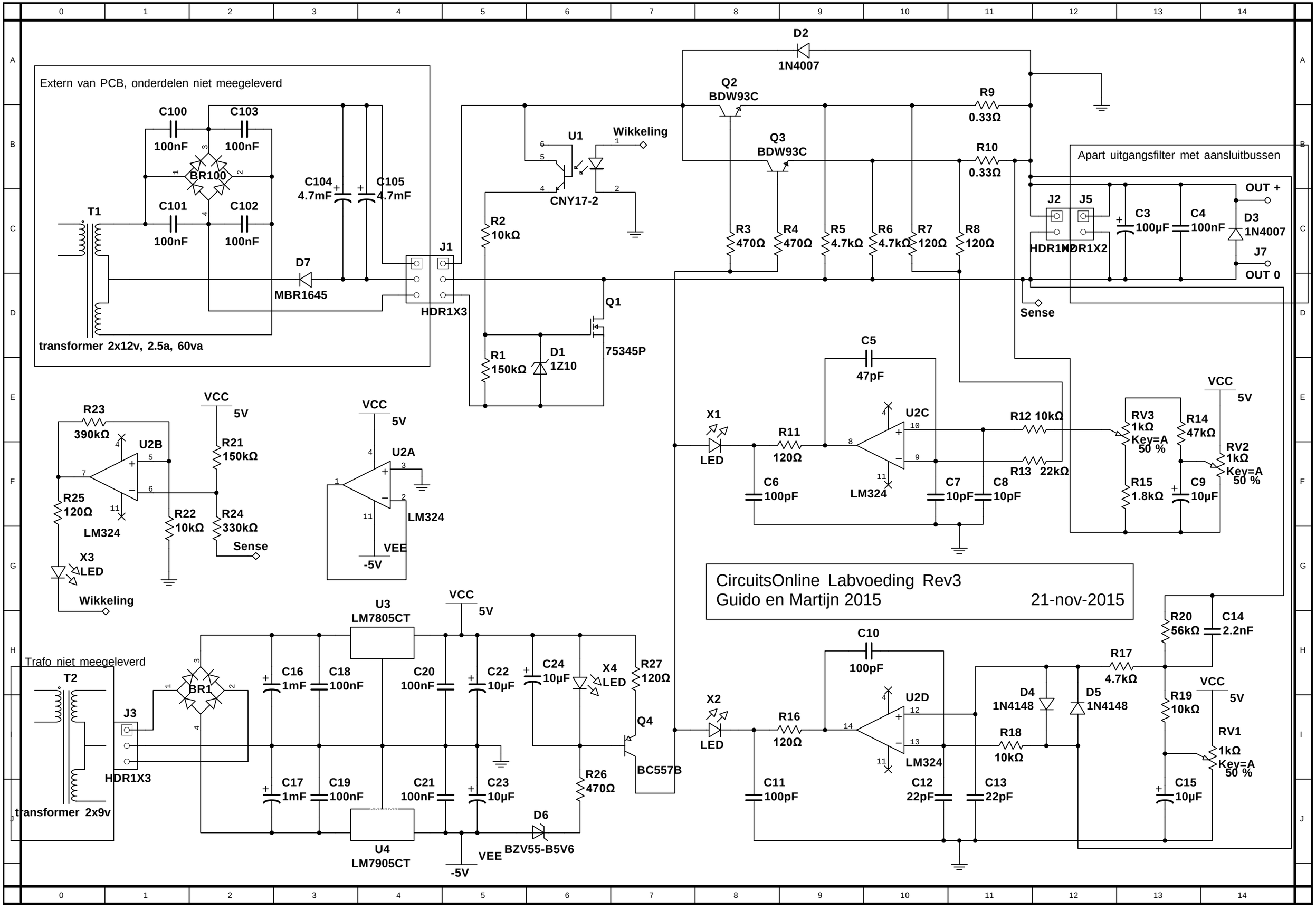
Extern van PCB, onderdelen niet meegeleverd
C100
100nF
C103
100nF
BR100
C101
100nF
C102
100nF
T1
transformer 2x12v, 2.5a, 60va
C104
4.7mF
C105
4.7mF
D7
MBR1645
J1
HDR1X3
D2
1N4007
Q2
BDW93C
Q3
BDW93C
R9
0.33Ω
R10
0.33Ω
U1
CNY17-2
Wikkeling
R2
10kΩ
R1
150kΩ
D1
1Z10
Q1
75345P
R3
470Ω
R4
470Ω
R5
4.7kΩ
R6
4.7kΩ
R7
120Ω
R8
120Ω
Apart uitgangsfilter met aansluitbussen
J2
J5
HDR1X2
C3
100µF
C4
100nF
OUT +
D3
1N4007
J7
OUT 0
Sense
C5
47pF
X1
LED
R11
120Ω
C6
100pF
U2C
LM324
R12 10kΩ
R13 22kΩ
C7
10pF
C8
10pF
RV3
1kΩ
Key=A
50 %
R14
47kΩ
RV2
1kΩ
Key=A
50 %
R15
1.8kΩ
C9
10µF
VCC
5V
R23
390kΩ
U2B
R25
120Ω
LM324
R21
150kΩ
R22
10kΩ
R24
330kΩ
Sense
X3
LED
Wikkeling
U2A
LM324
VEE
-5V
CircuitsOnline Labvoeding Rev3
Guido en Martijn 2015
21-nov-2015
Trafo niet meegeleverd
T2
J3
HDR1X3
transformer 2x9v
BR1
C16
1mF
C18
100nF
C17
1mF
C19
100nF
U3
LM7805CT
U4
LM7905CT
C20
100nF
C21
100nF
C22
10µF
C23
10µF
C24
10µF
X4
LED
R27
120Ω
Q4
BC557B
R26
470Ω
D6
BZV55-B5V6
X2
LED
R16
120Ω
C11
100pF
C10
100pF
U2D
LM324
C12
22pF
C13
22pF
D4
1N4148
D5
1N4148
R18
10kΩ
R17
4.7kΩ
R20
56kΩ
C14
2.2nF
R19
10kΩ
RV1
1kΩ
Key=A
50 %
C15
10µF