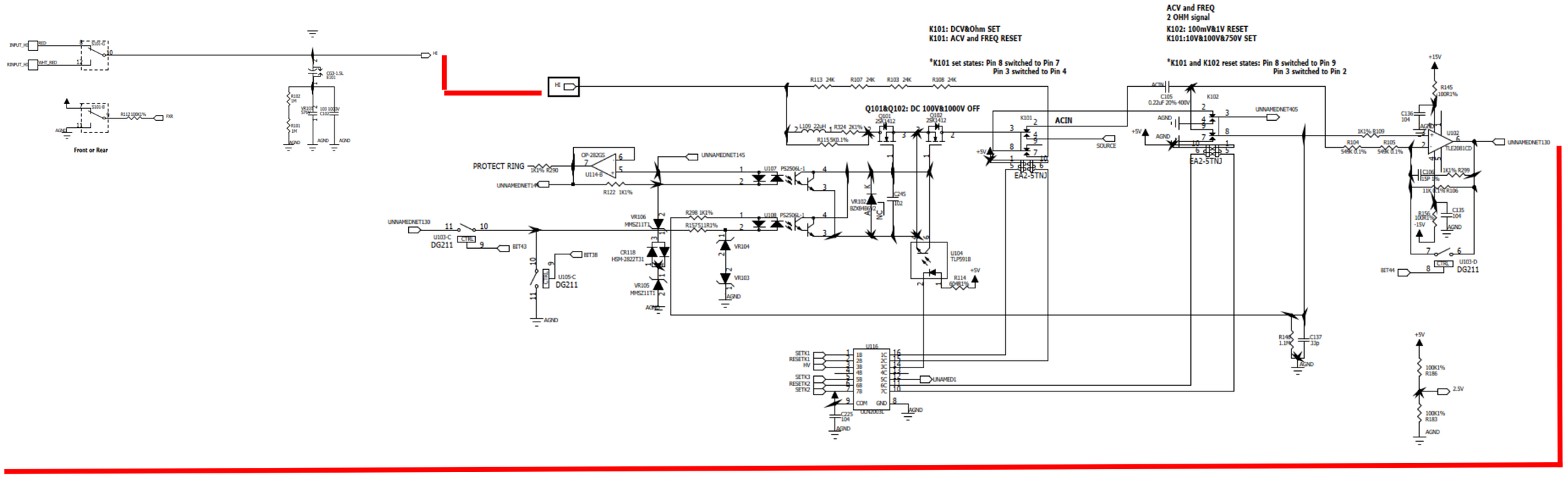

U103 :ACA Pin1 OFF
U103 :ACV and FREQ Pin8&Pin9 100mV&1V ON
ACV and FREQ Pin8&Pin9 10V&100V&750V OFF

Table 2-6
ACV and FREQ signal switching

Range	Q101	Q102	K101*	K102*	U103 pin 8	U103 pin 9	U105 pin 9	U105 pin 8	U103 pin 16	U103 pin 1	U105 pin 1	U111 pin 16
100mV	ON	ON	RESET	RESET	ON	ON	OFF	OFF	OFF	ON	ON	OFF
1V	ON	ON	RESET	RESET	ON	ON	OFF	OFF	ON	OFF	OFF	OFF
10V	ON	ON	RESET	SET	OFF	OFF	ON	OFF	OFF	ON	ON	OFF
100V	ON	ON	RESET	SET	OFF	OFF	ON	OFF	ON	OFF	OFF	OFF
750V	ON	ON	RESET	SET	OFF	OFF	ON	ON	OFF	OFF	OFF	OFF

*K101 and K102 reset states: Pin 8 switched to Pin 9, Pin 3 switched to Pin 2
K101 and K102 set states: Pin 8 switched to Pin 7, Pin 3 switched to Pin 4

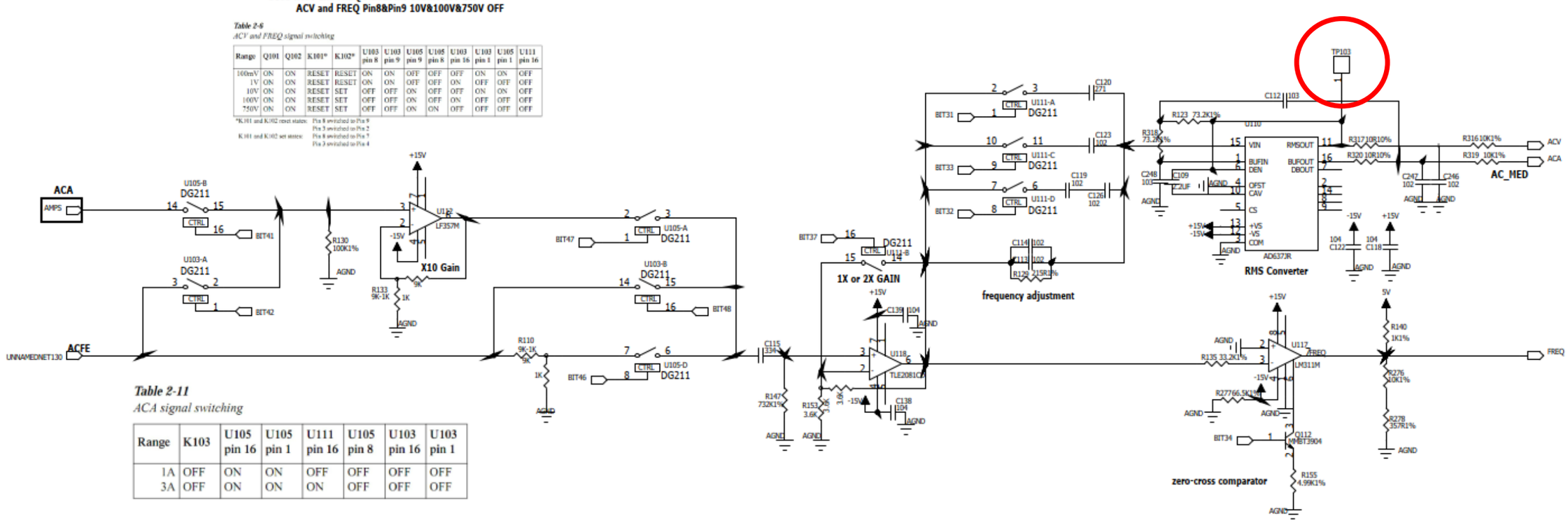

Table 2-11
ACA signal switching

Range	K103	U105 pin 16	U105 pin 1	U111 pin 16	U105 pin 8	U103 pin 16	U103 pin 1
1A	OFF	ON	ON	OFF	OFF	OFF	OFF
3A	OFF	ON	ON	ON	OFF	OFF	OFF