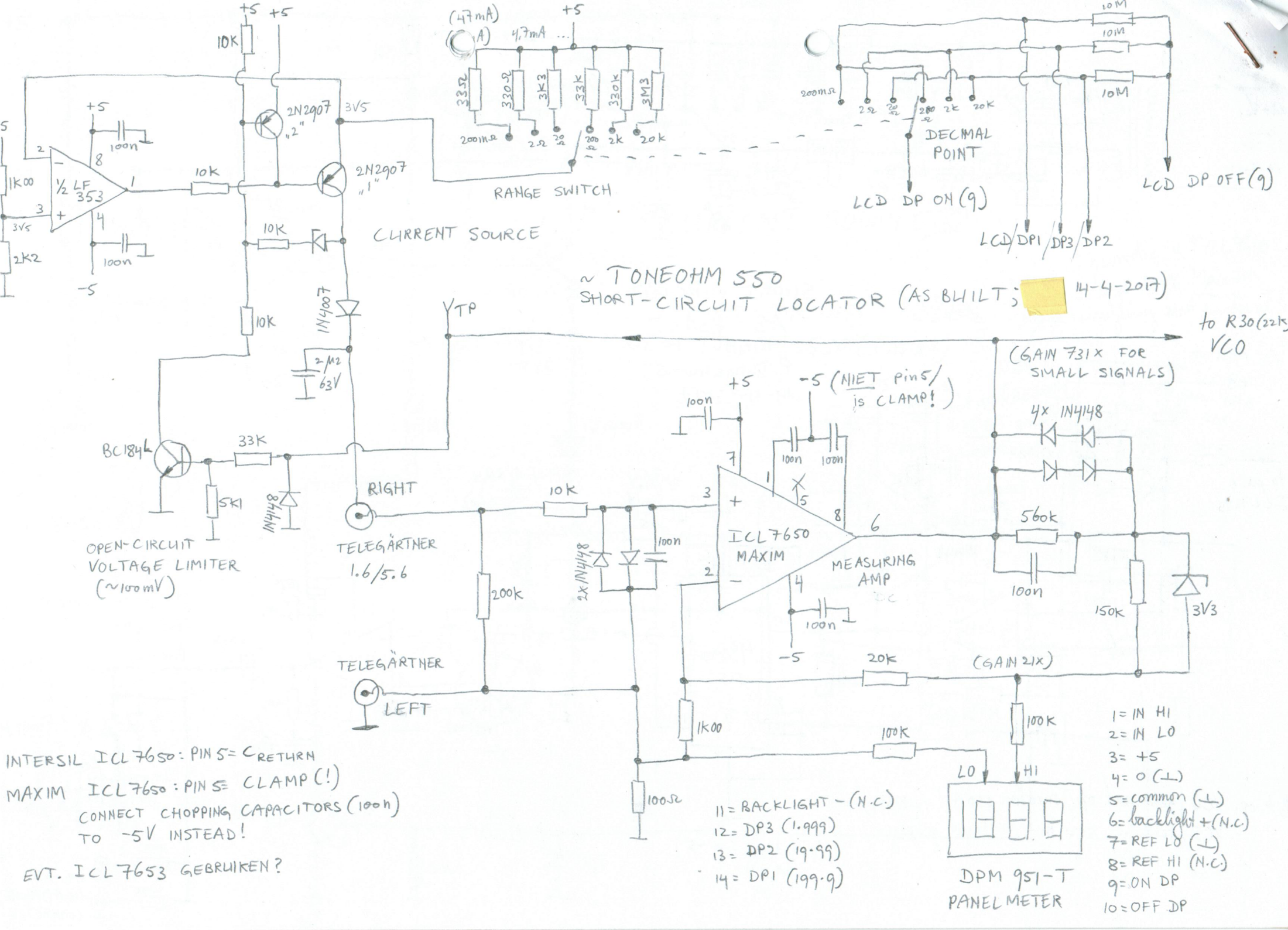
~ TONEOHM 550
SHORT-CIRCUIT LOCATOR (AS BUILT; 14-4-2017)
CURRENT SOURCE
RANGE SWITCH
DECIMAL POINT
LCD DP ON (9)
LCD DP OFF (9)
LCD DP1 DP3 DP2
½ LF 353
2N2907 „2"
2N2907 „1"
1N4007
BC184L
OPEN-CIRCUIT VOLTAGE LIMITER (~100mV)
TELEGÄRTNER 1.6/5.6
TELEGÄRTNER LEFT
VTP
to R30 (22k) VCO
(GAIN 731x FOR SMALL SIGNALS)
-5 (NIET pin5 is CLAMP!)
ICL7650 MAXIM
MEASURING AMP
4x 1N4148
2x 1N4148
(GAIN 21x)
DPM 951-T PANEL METER
1 = IN HI
2 = IN LO
3 = +5
4 = 0 (⊥)
5 = common (⊥)
6 = backlight + (N.C.)
7 = REF LO (⊥)
8 = REF HI (N.C.)
9 = ON DP
10 = OFF DP
11 = BACKLIGHT − (N.C.)
12 = DP3 (1.999)
13 = DP2 (19.99)
14 = DP1 (199.9)
INTERSIL ICL7650: PIN 5 = C RETURN
MAXIM ICL7650: PIN 5 = CLAMP (!)
CONNECT CHOPPING CAPACITORS (100n) TO −5V INSTEAD!
EVT. ICL7653 GEBRUIKEN?

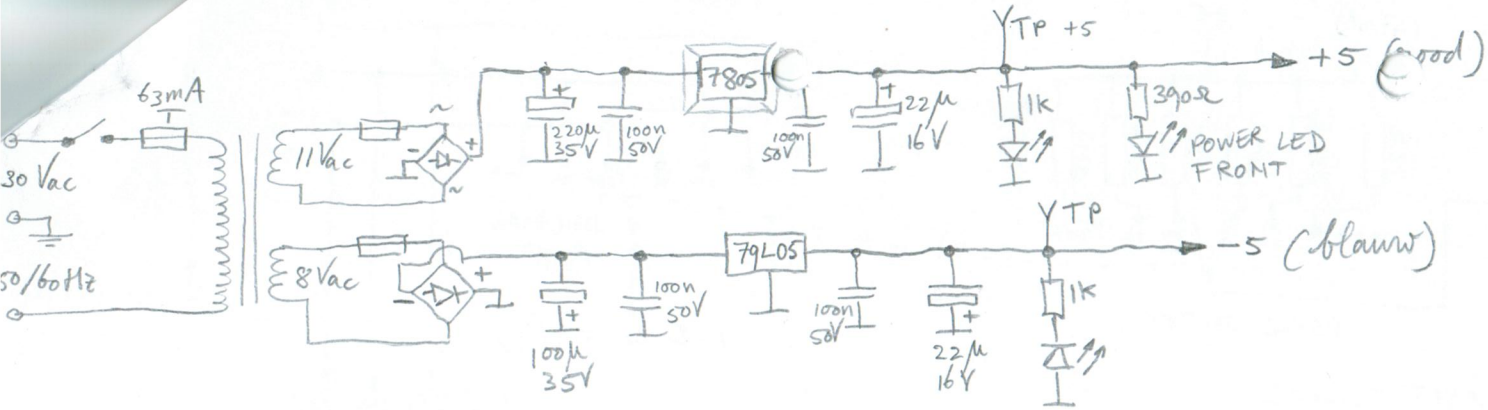

SHORT-CIRCUIT LOCATOR
AS BUILT.

14-4-2017.

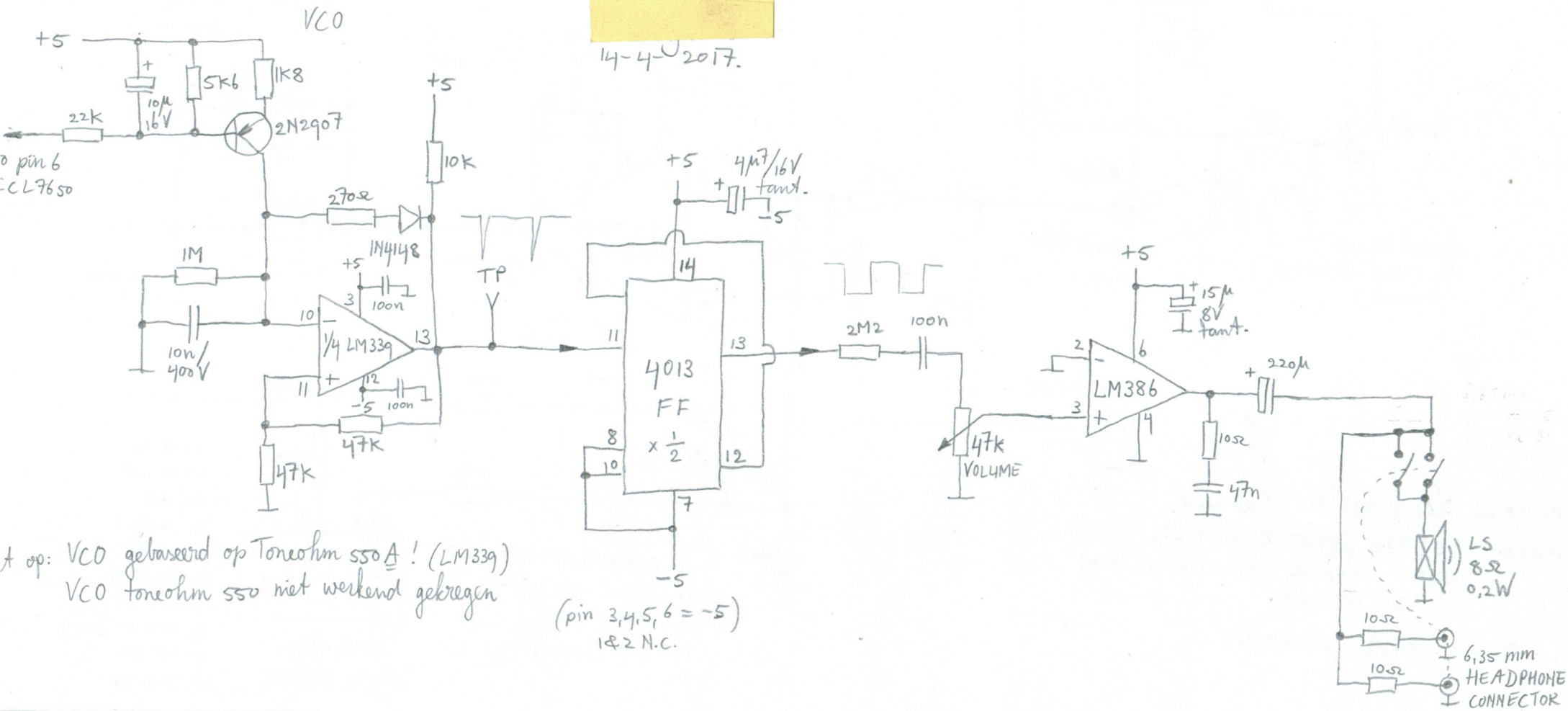

Let op: VCO gebaseerd op Toneohm 550A ! (LM339)
VCO toneohm 550 niet werkend gekregen

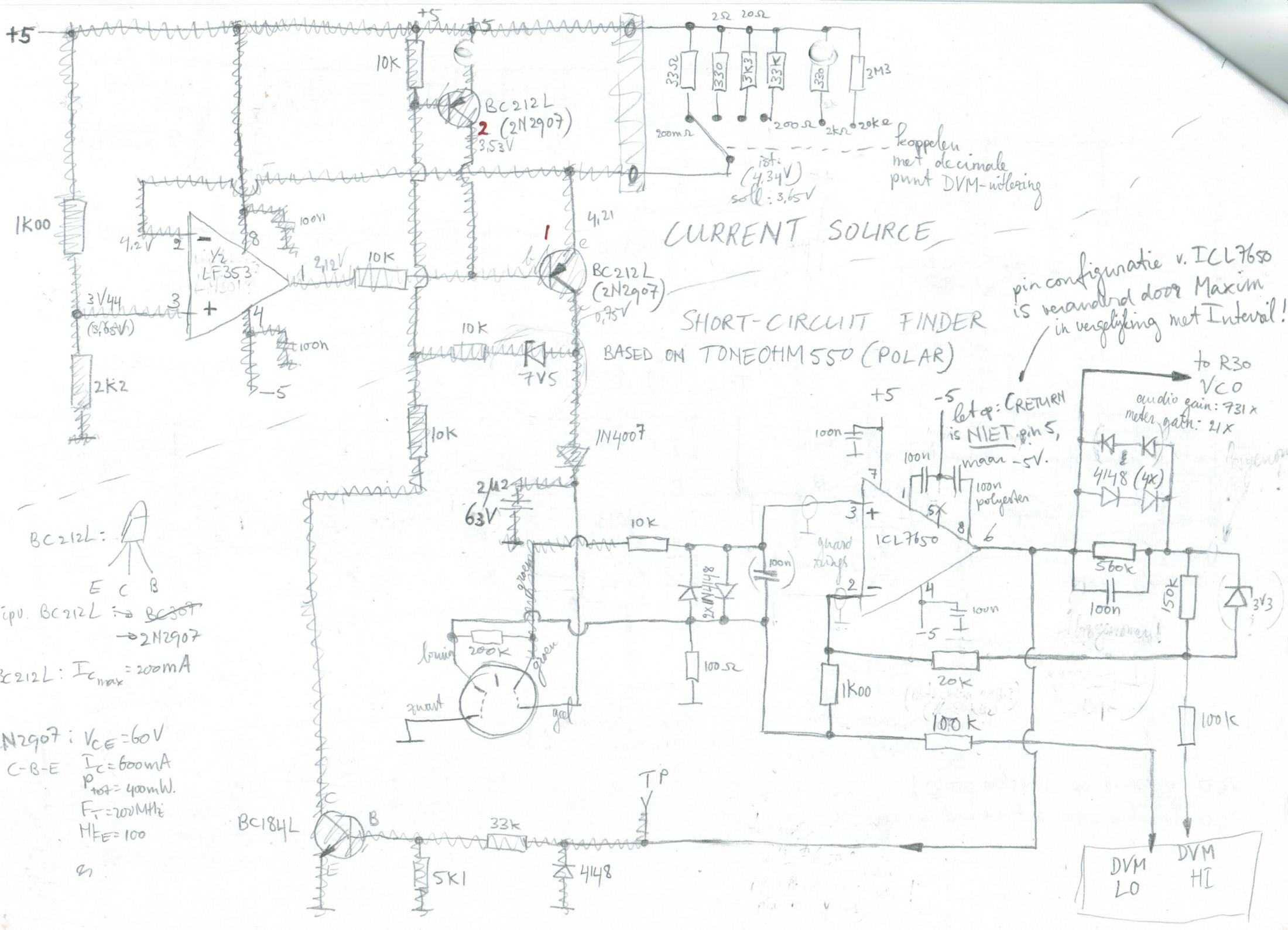
CURRENT SOURCE
SHORT-CIRCUIT FINDER
BASED ON TONEOHM 550 (POLAR)
pin configuratie v. ICL7650 is veranderd door Maxim in vergelijking met Intersil!
koppelen met decimale punt DVM-uitlezing
ist: (4,34V)
soll: 3,65V
BC212L (2N2907)
BC212L: E C B
ipv. BC212L → ~~BC307~~ → 2N2907
BC212L: $I_{C_{max}}$ = 200mA
2N2907: V_{CE} = 60V
C-B-E
I_C = 600mA
P_{tot} = 400mW.
F_T = 200MHz
H_{FE} = 100
BC184L
ICL7650
LF353
1/2
7V5
1N4007
4148
2x1N4148
4148 (4x)
TP
DVM LO
DVM HI
to R30 VCO
audio gain: 731x
meter gain: 21x
let op: CRETURN is NIET pin 5, maar -5V.
100n polyester
guard rings
bruin
groen
geel
zwart

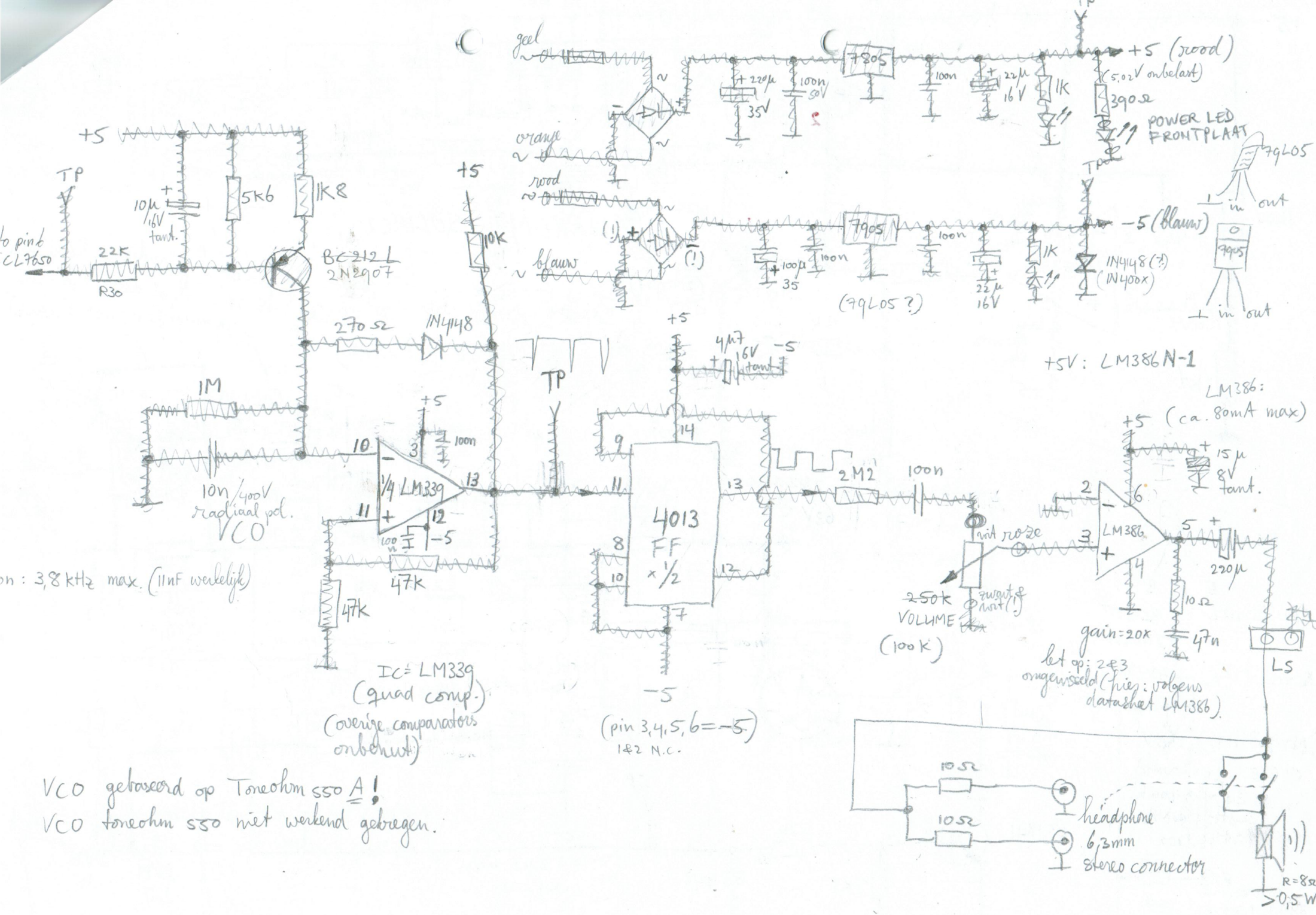

VCO gebaseerd op Toneohm 550 A!

VCO toneohm 550 niet werkend gebregen.