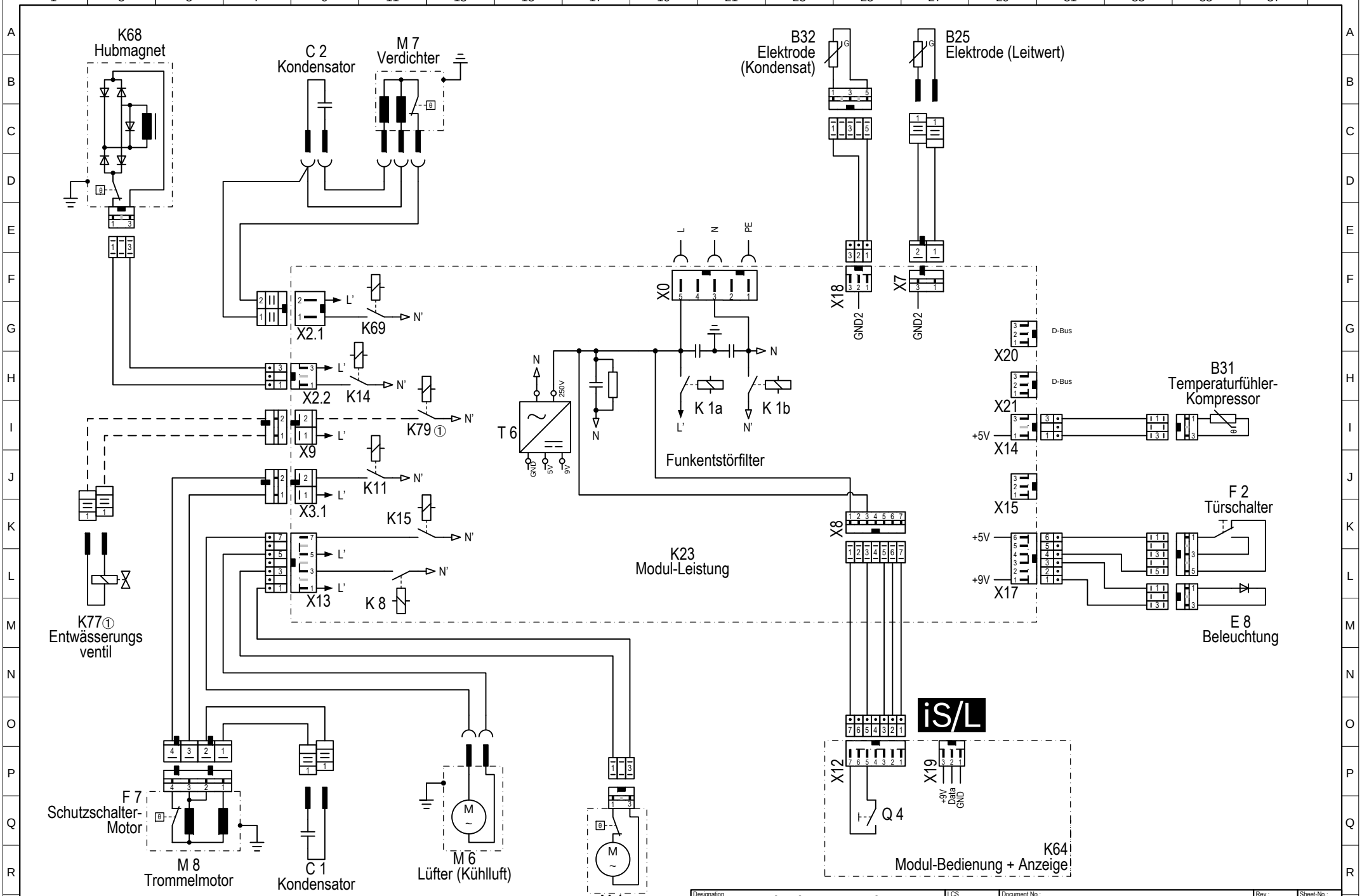

The reproduction, transmission or use of this document or its contents is not permitted express written authority.
Offenders will be liable for damages.
All rights including rights created by patent grant or
registration of a utility model or design are reserverd. Copyright reserved.

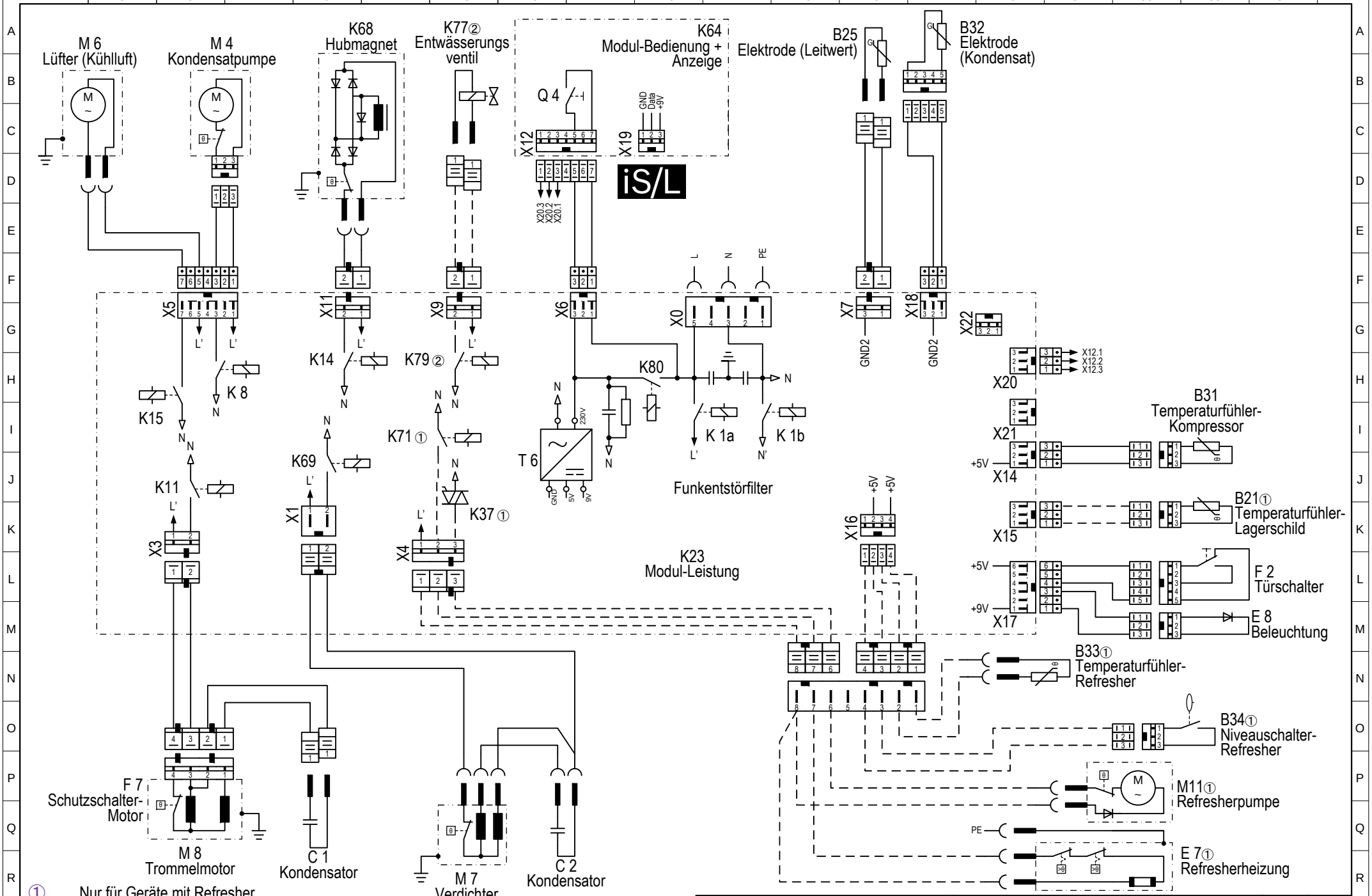

The reproduction, transmission or use of this document or its contents is not permitted express written authority.
Offenders will be liable for damages.
All rights including rights created by patent grant or
registration of a utility model or design are reserverd. Copyright reserved.

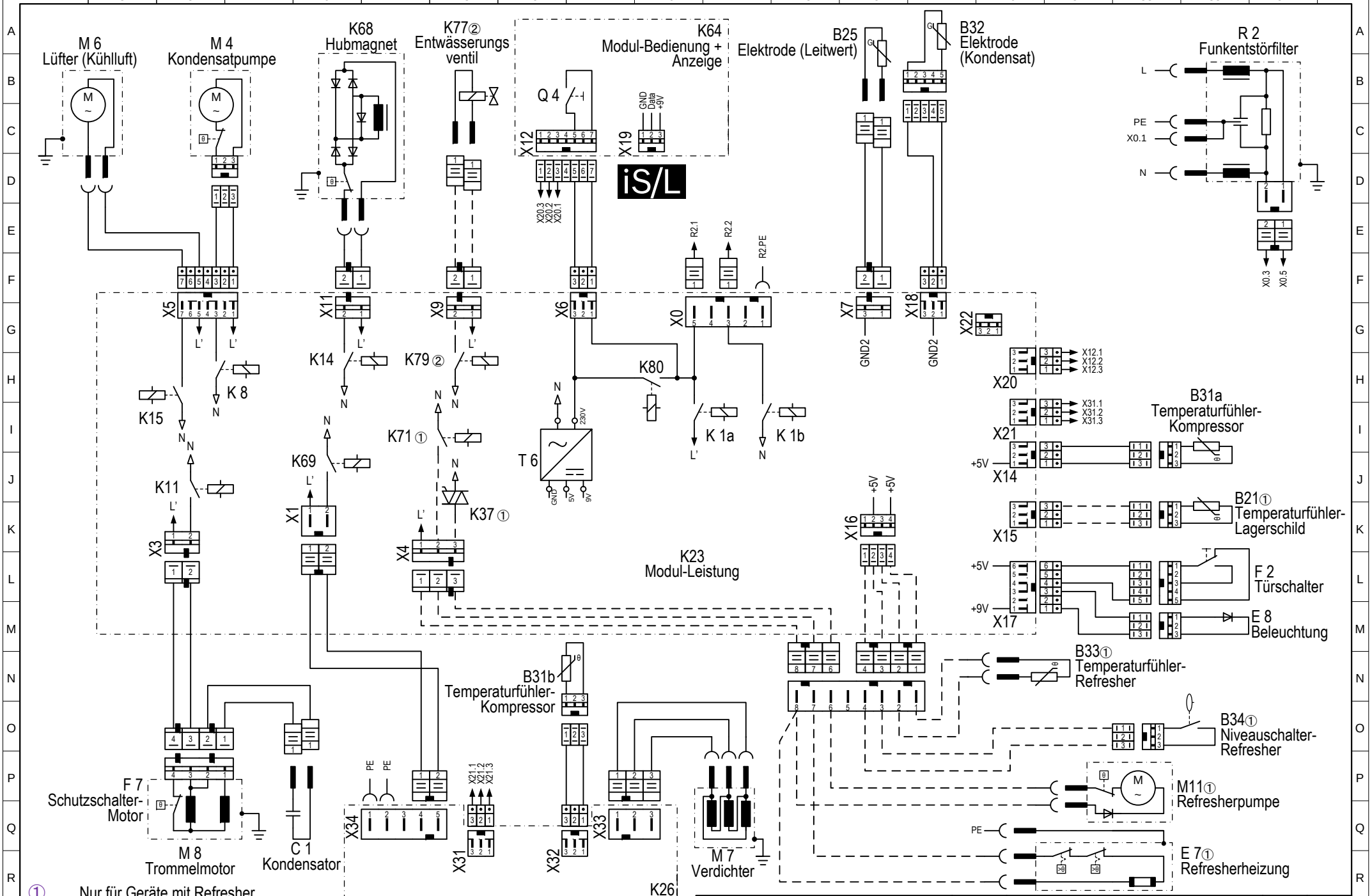

The reproduction, transmission or use of this document or its contents is not permitted express written authority.
Offenders will be liable for damages.
All rights including rights created by patent grant or registration of a utility model or design are reserverd. Copyright reserved.

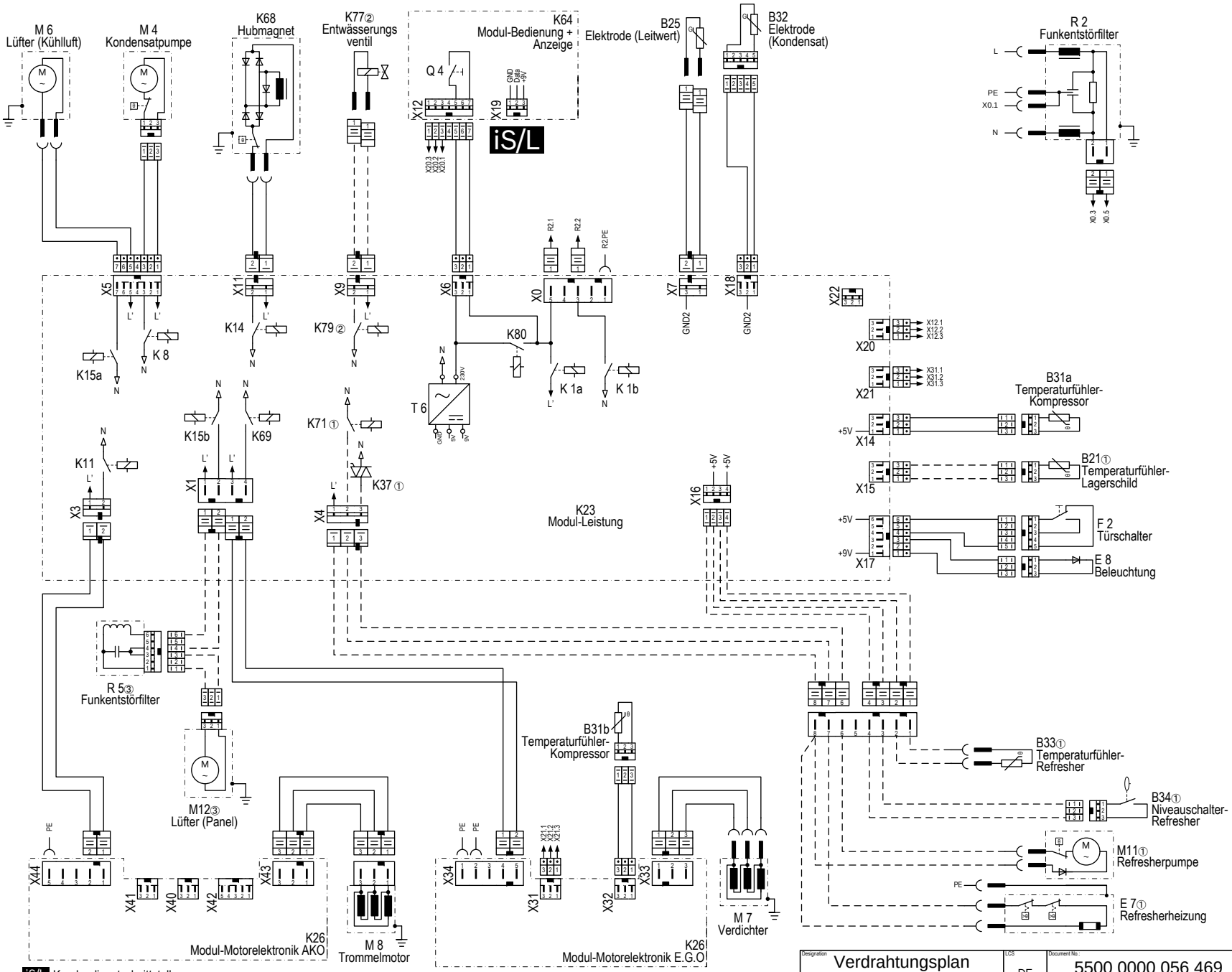

① Nur für Geräte mit Refresher
② Nur für Geräte mit Drain Set
③ Nur für Geräte mit Lüfter Panel
----/ ✻ Nicht in allen Varianten enthalten

iS/L Kundendienstschnittstelle

Designation: Verdrahtungsplan T24_XE A+++	LCS: DE	Document No.: 5500 0000 056 469	Rev.: F
		Material No.: 9000 599 902	05.12.2014 Meina
		Sheet No.: 4 of: 5	

The reproduction, transmission or use of this document or its contents is not permitted express written authority. Offenders will be liable for damages. All rights including rights created by patent grant or registration of a utility model or design are reserverd. Copyright reserved.

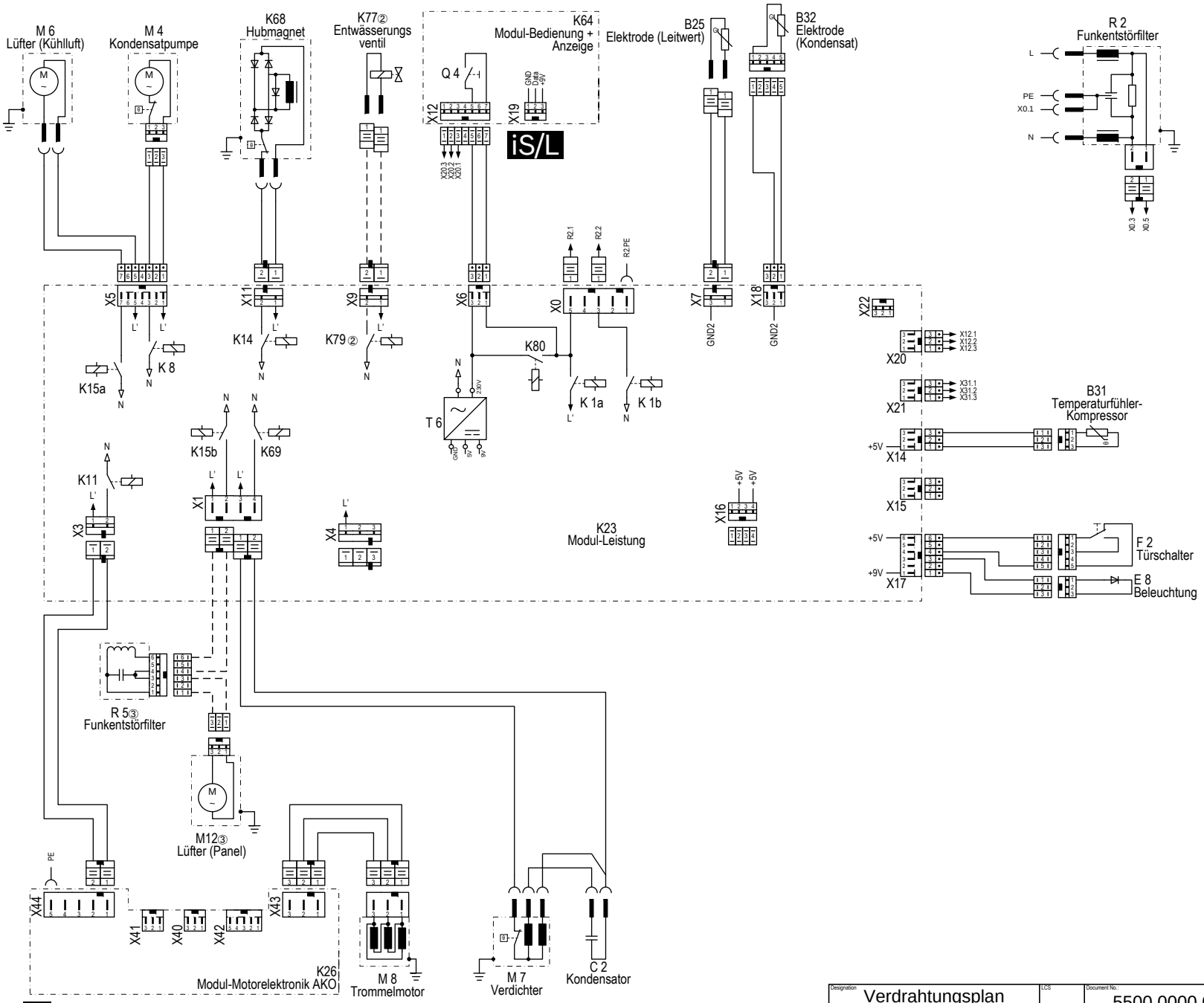

② Nur für Geräte mit Drain Set

③ Nur für Geräte mit Lüfter Panel

----/ ✻ Nicht in allen Varianten enthalten

iS/L Kundendienstschnittstelle

Designation	LCS	Document No.:	Rev.:	Sheet No.:
Verdrahtungsplan T24_XE A+++ Green	DE	5500 0000 056 469	F	5 of 5
		Material No.: 9000 599 902	05.12.2014 Meina	

The reproduction, transmission or use of this document or its contents is not permitted express written authority. Offenders will be liable for damages. All rights including rights created by patent grant or registration of a utility model or design are reserverd. Copyright reserved.