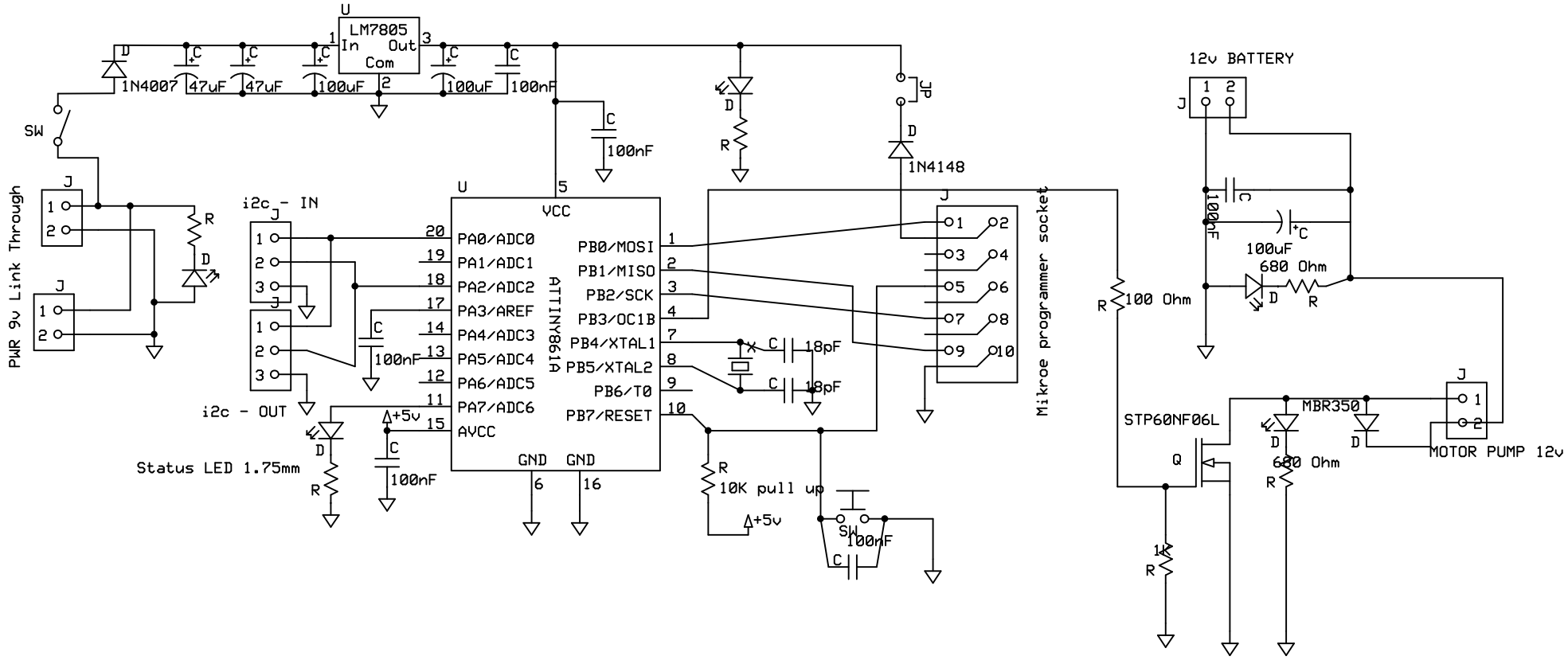

Wouter van Wegen		
WVW_21_I2C_PUMP_CONTROL		
	v1.5	
	4/24/2016	

E:\WVW_PCB_DESIGN\WVW_21_I2C_PUMP_CONTROL\WVW_21_I2C_PUMP_CONTROL_V1.5.sch - Sheet1