Trouble shooting system

2016/12/11

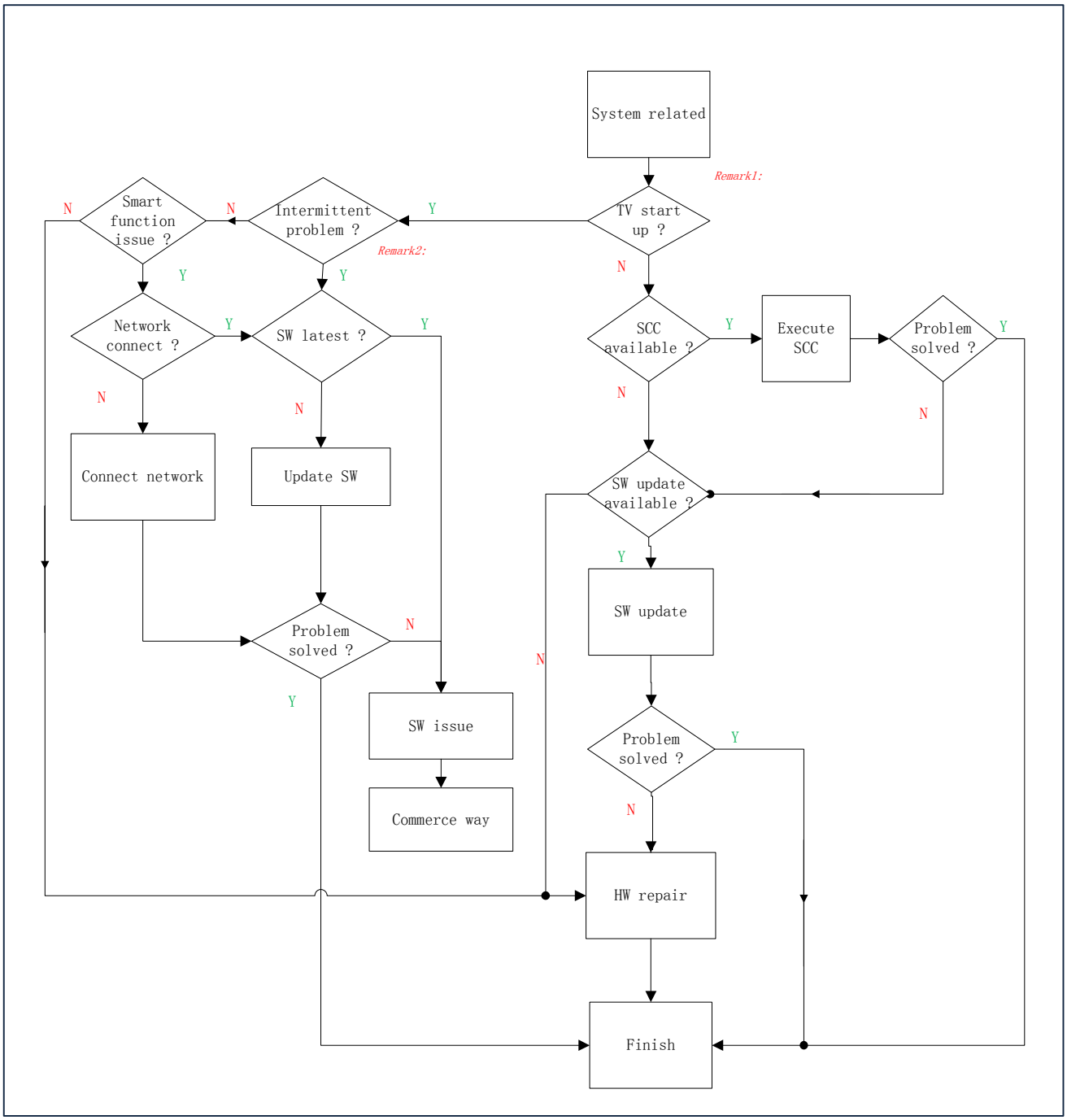

Remark1 : What is System related issue ?

1.Permanent reboots
2.Intermittent reboots
3.No function, no standby LED (set dead)
4.No function, blinking LED
5.Set freezes, intermittently
6.Slow response to user interaction
7.Switches ON by itself
8.Switches Off by itself
9.Stuck in standby mode / unable to start up
10.Stuck on PHILIPS / ANDROID logo
11.CAM not recognized by TV
12.CAM authentication issue
13.Misc CAM issue
14.IP-EPG issues
15.BC-EPG issues
16.PVR issues w/ BC-EPG
17.PVR issues w/ IP-EPG
18.PVR issues / generic
19.EDFU-related issue
20.Features not available in UI / cannot be activated

Remark2 : How to judge intermittent issue ?

1.When the problem happened can be solved by:
1)AC off AC on
2)DC off DC on
3)RC switch different source

2.The problem intermittent happened

7.Electrical Diagram

7.1 Block diagram

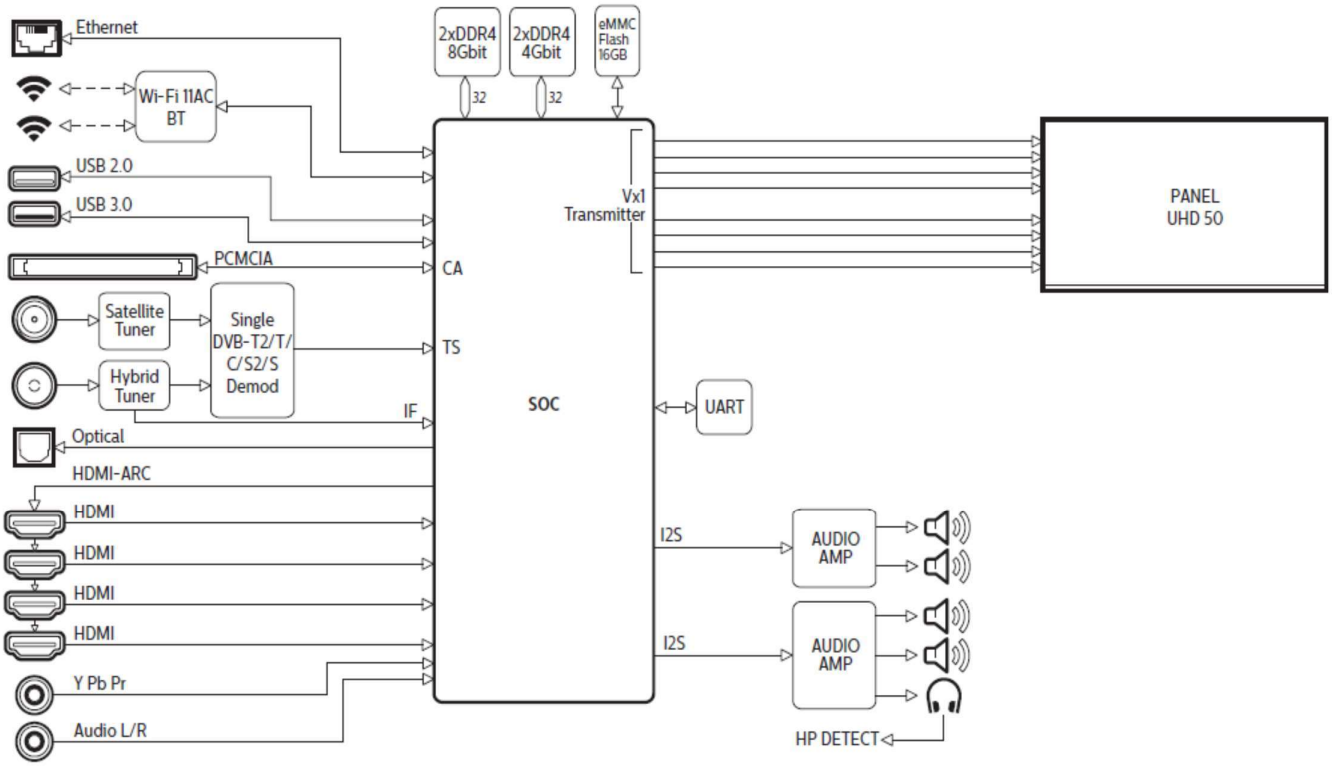

7.2 Power Supply

Power architecture of this platform.

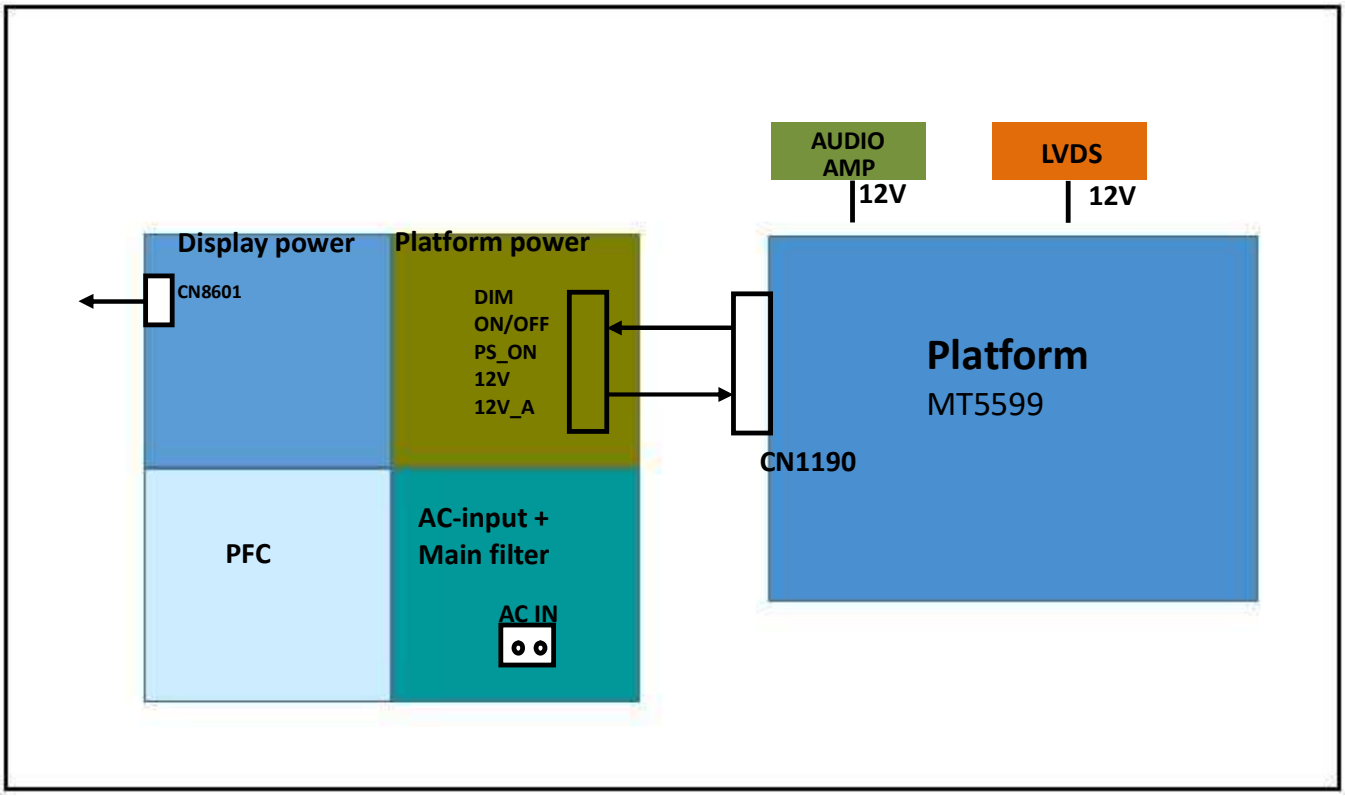

7.3 Power tree

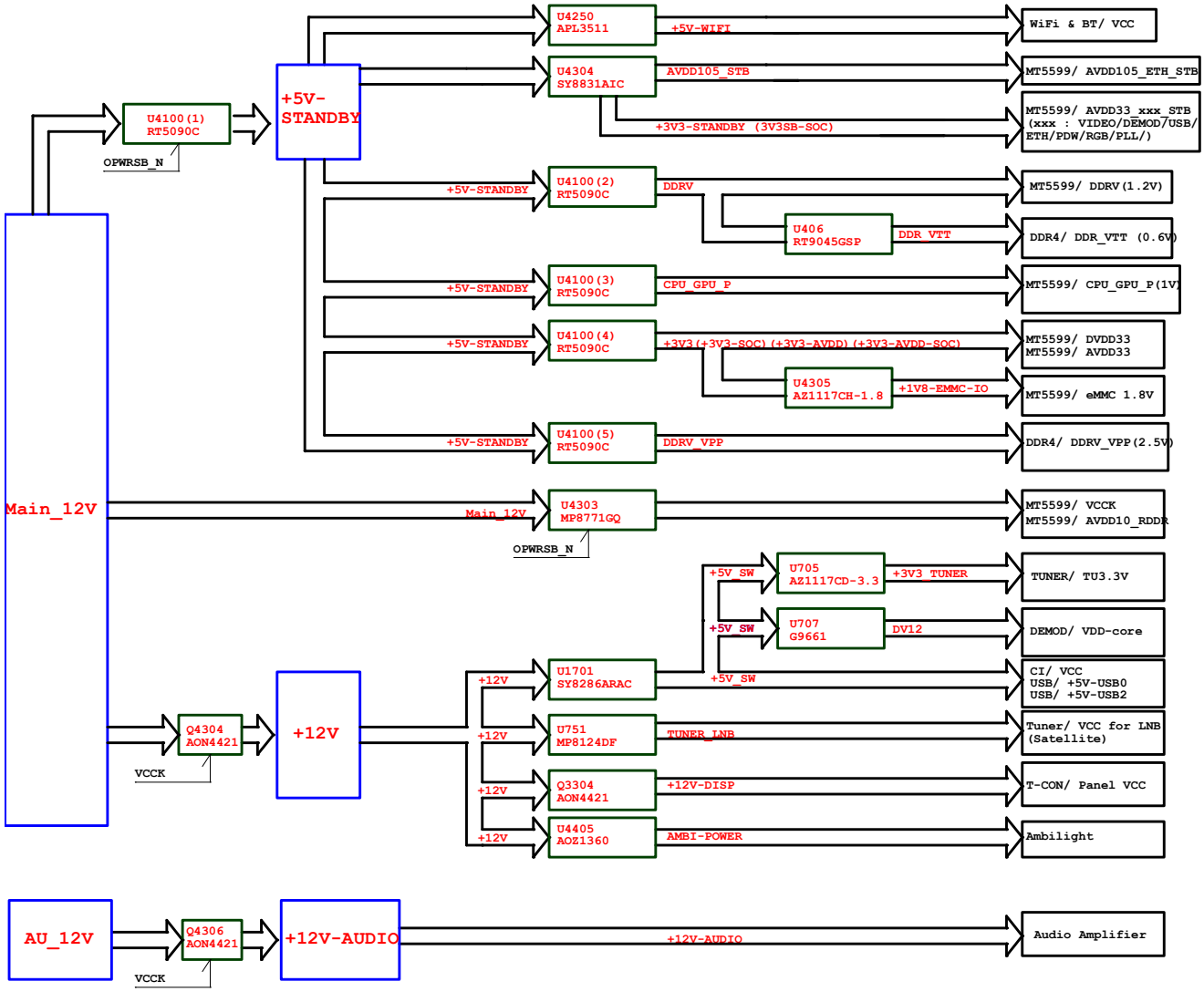

7.4 Power layout SSB

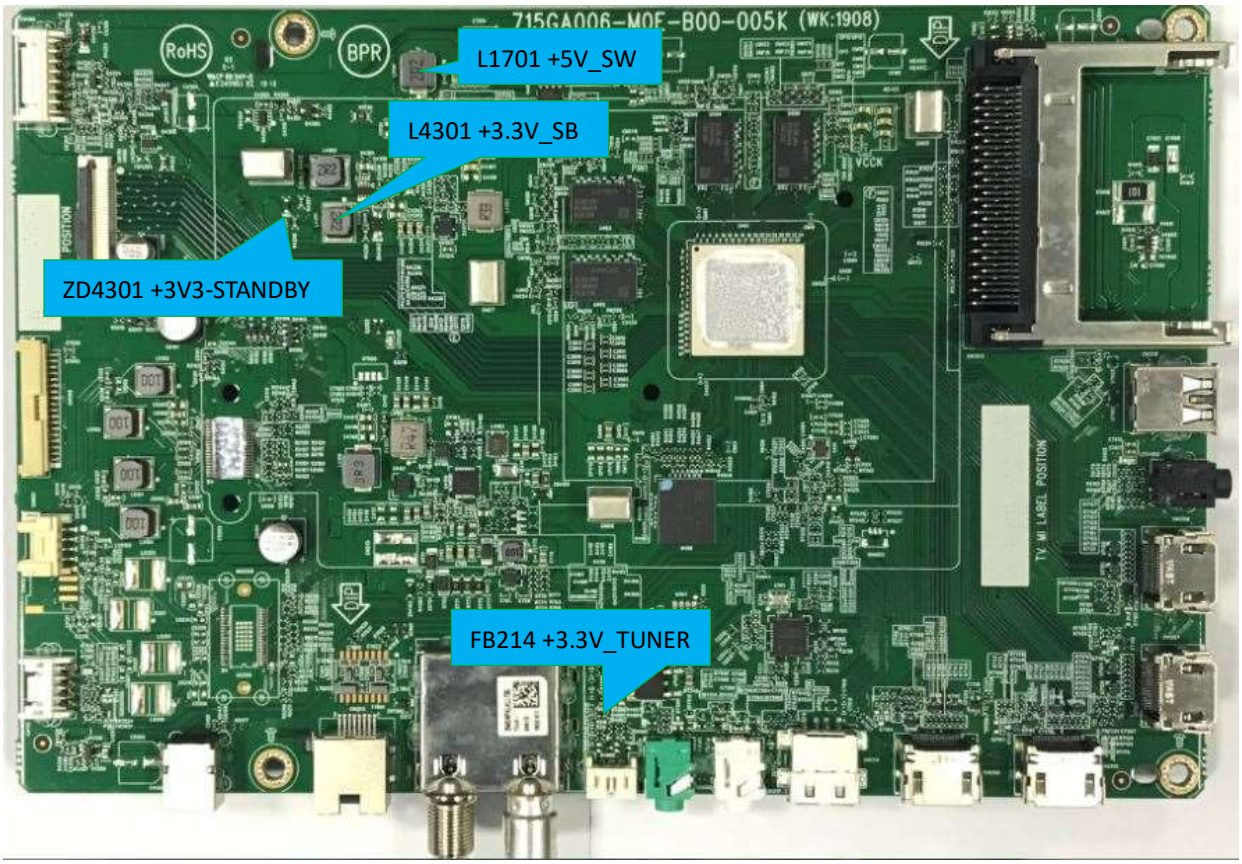

Power SSB Top View

Power SSB Bottom View

8. IC Data Sheets

8.1 MT5599IFEQ (IC U401--Scaler)

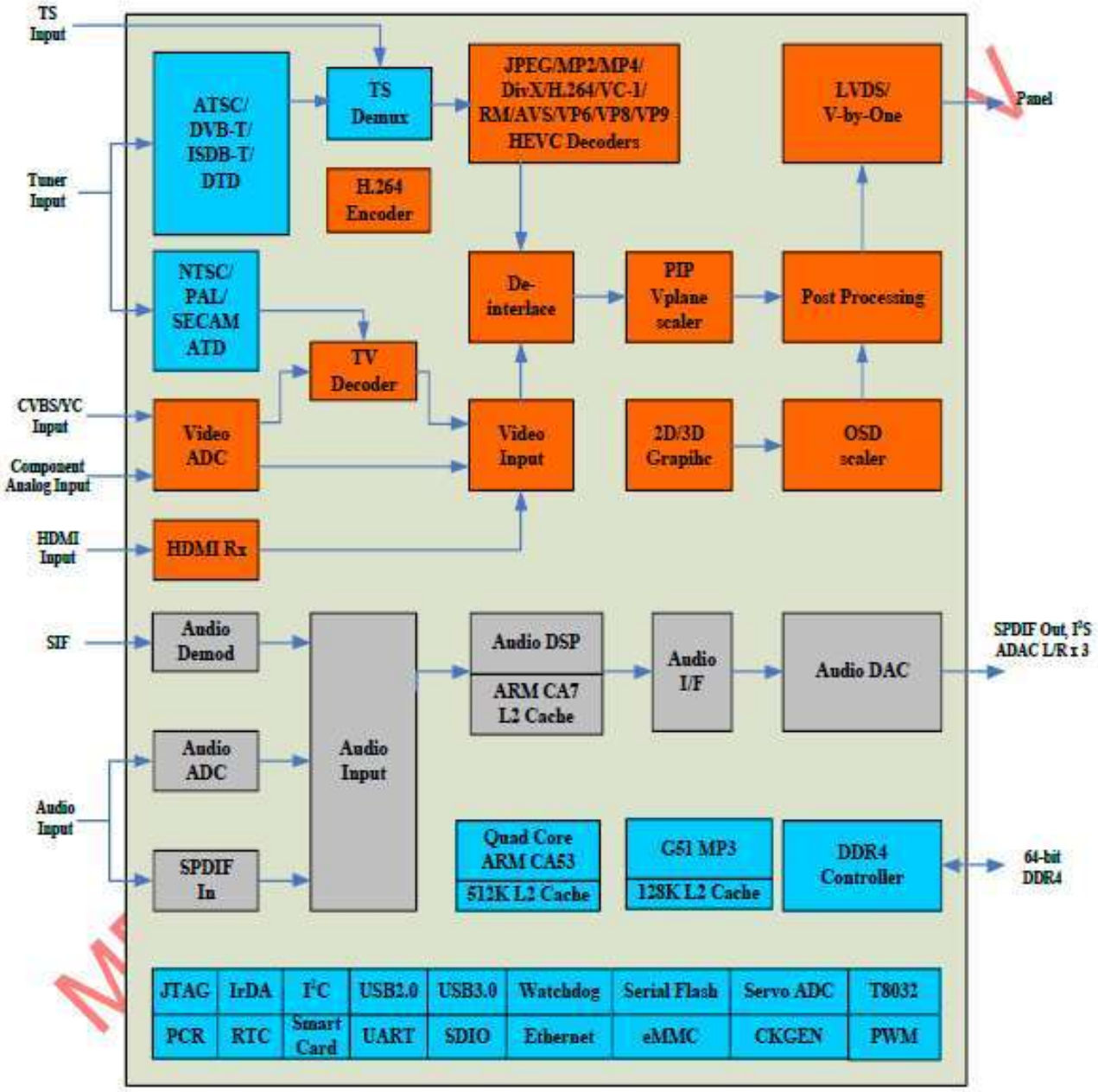

8.2 TAS5760LDDCAR (IC U5100--Audio)

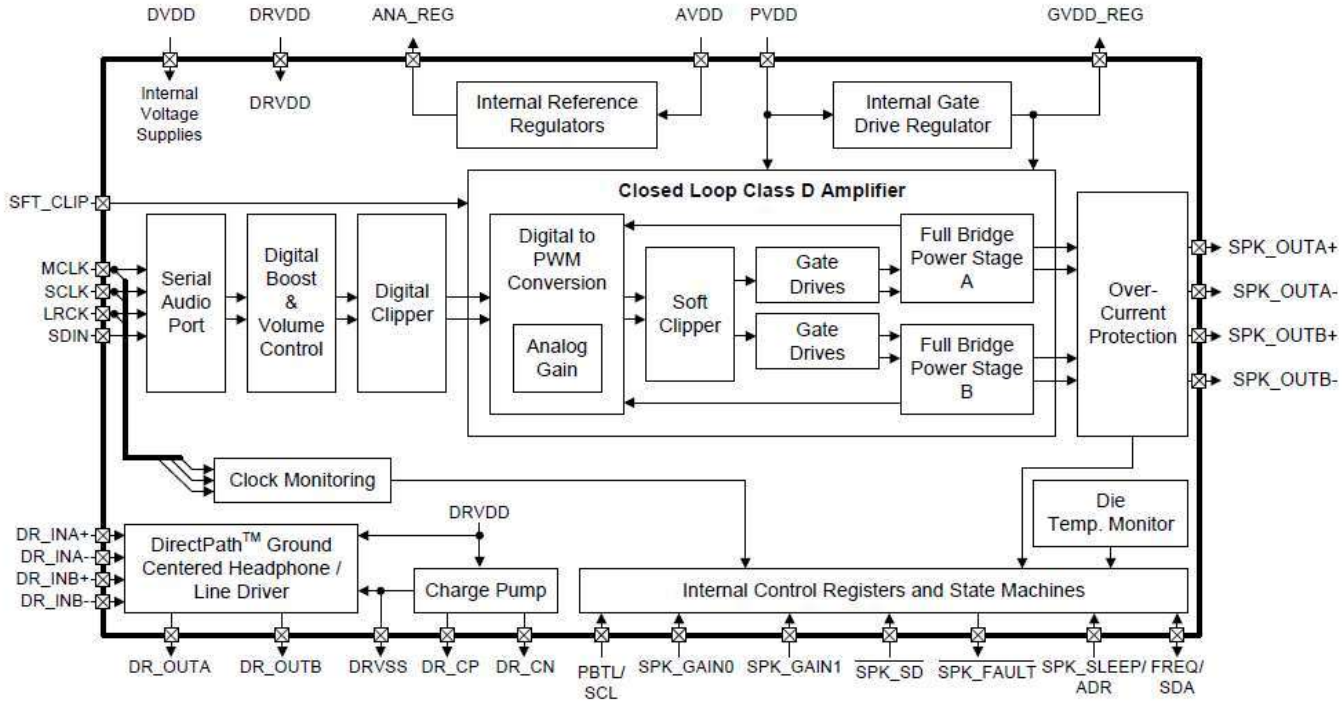

TSSOP PACKAGE
DCA-48
(TOP VIEW)

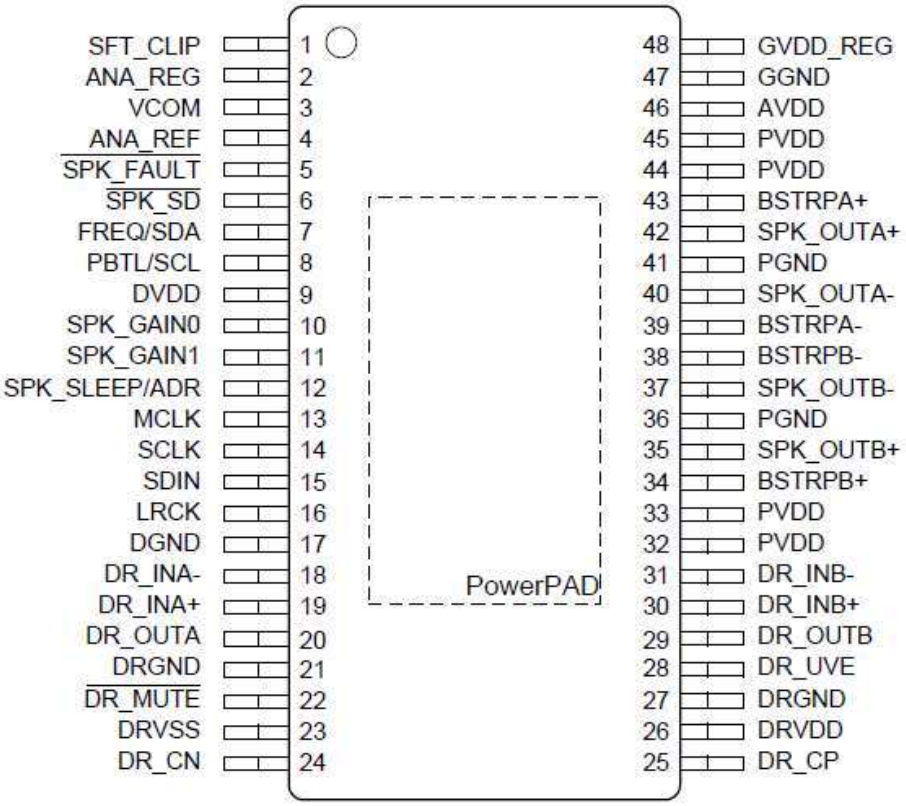

8.3 SI2169-D60-GMR (U201)

Functional Block Diagram

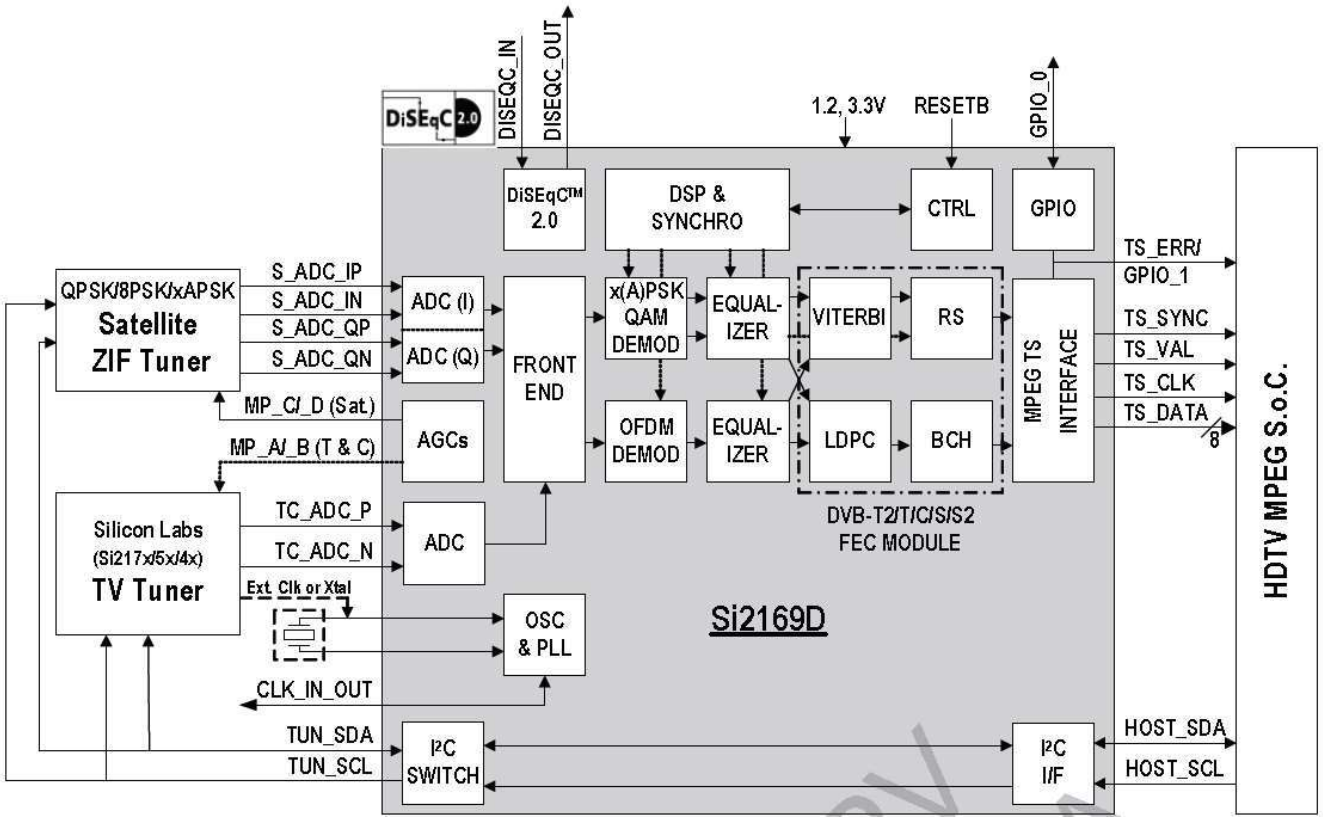

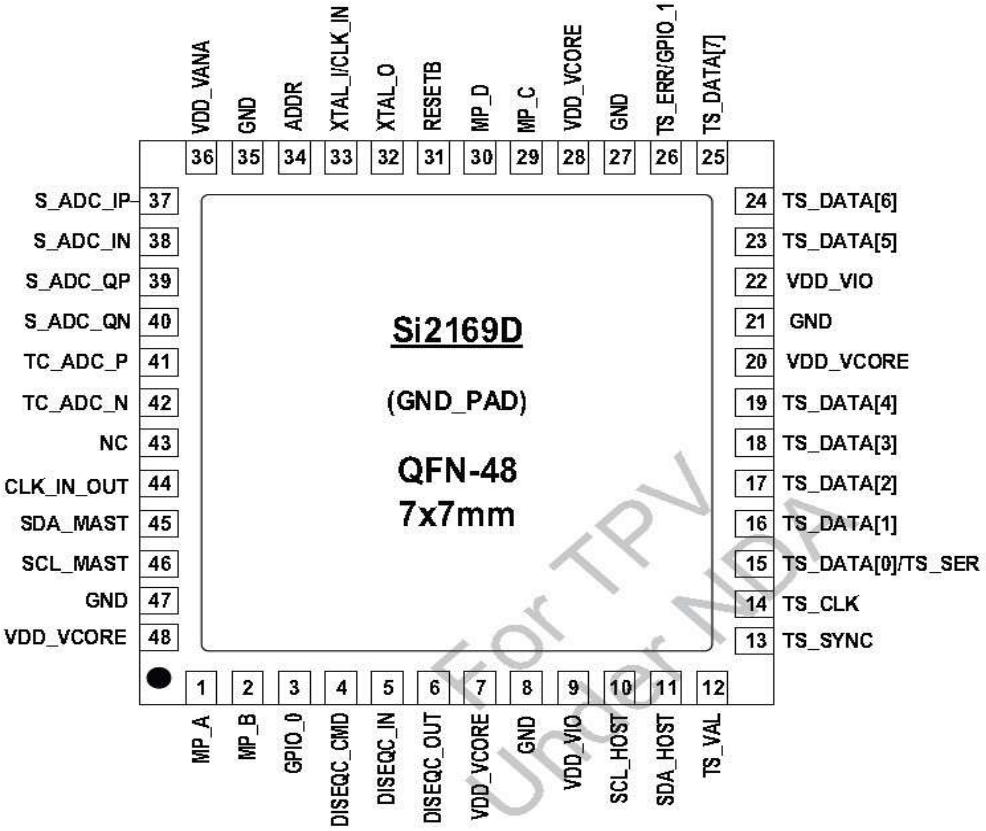

For TPV Under NDA

9.Circuit Diagrams

9.1 A 715GA052 PSU (For 43”85x5/9235 Series)

9-1-1 AC Input

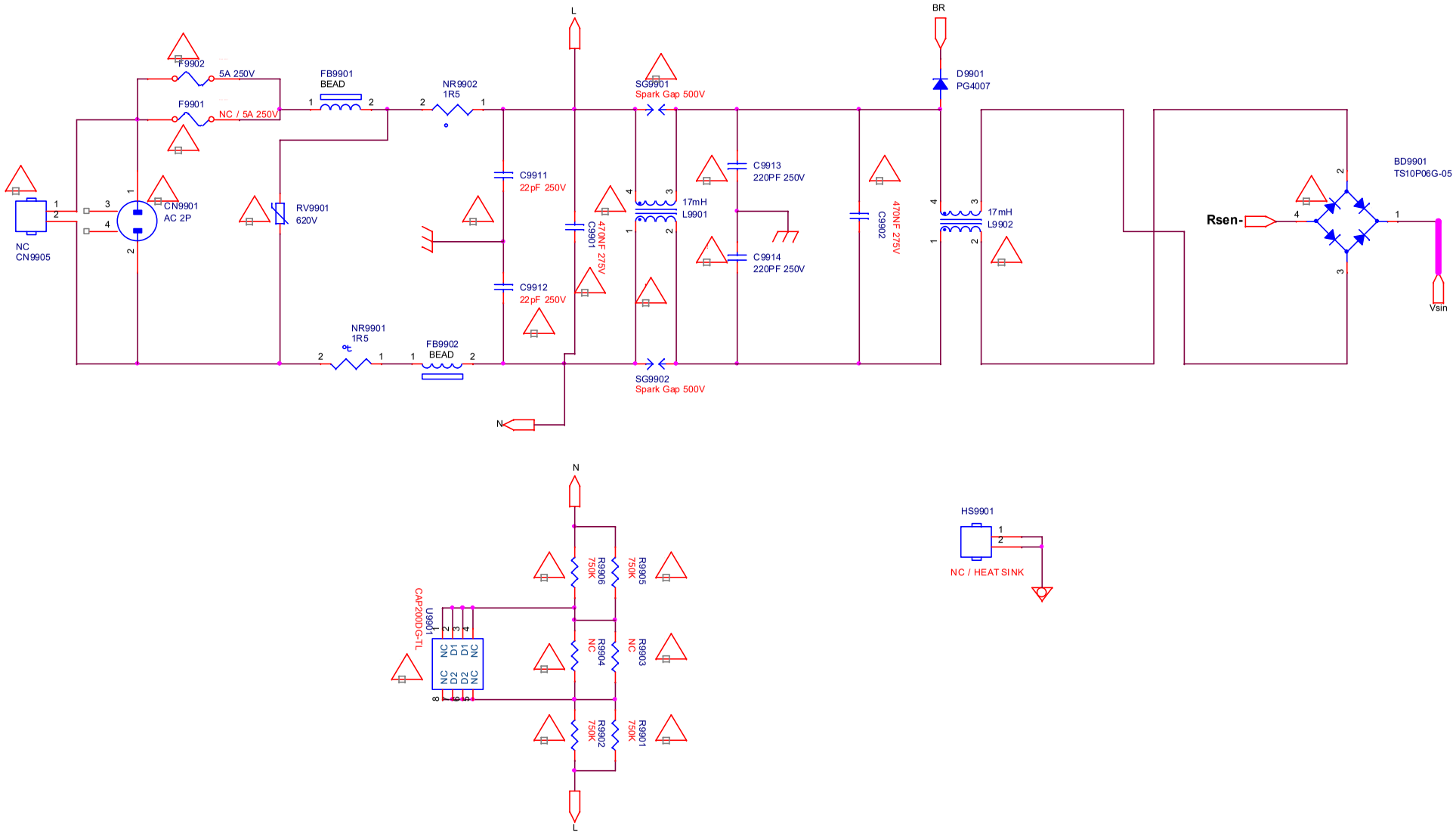

9-1-2 PFC with LD7592GS

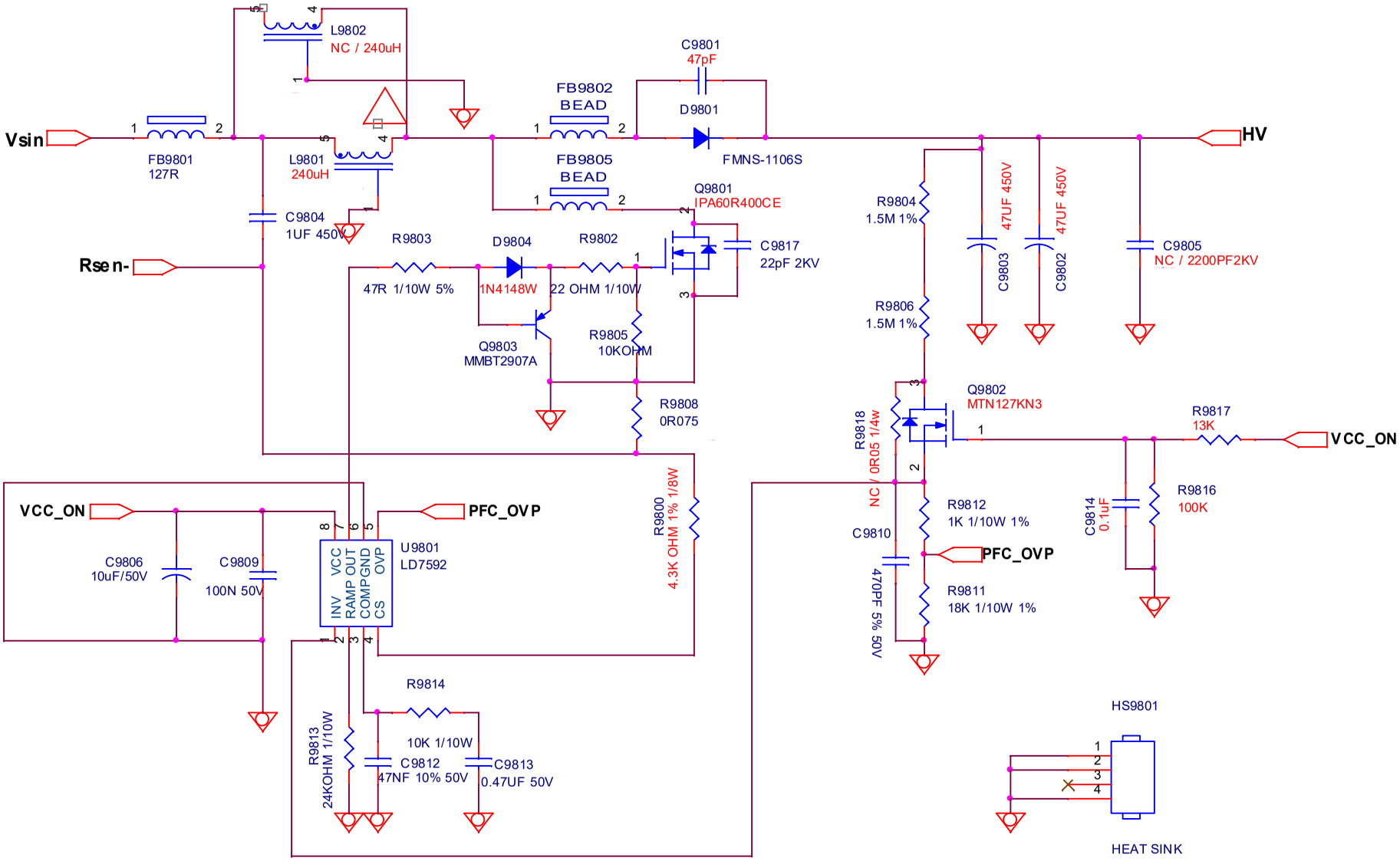

9-1-3 Main Power

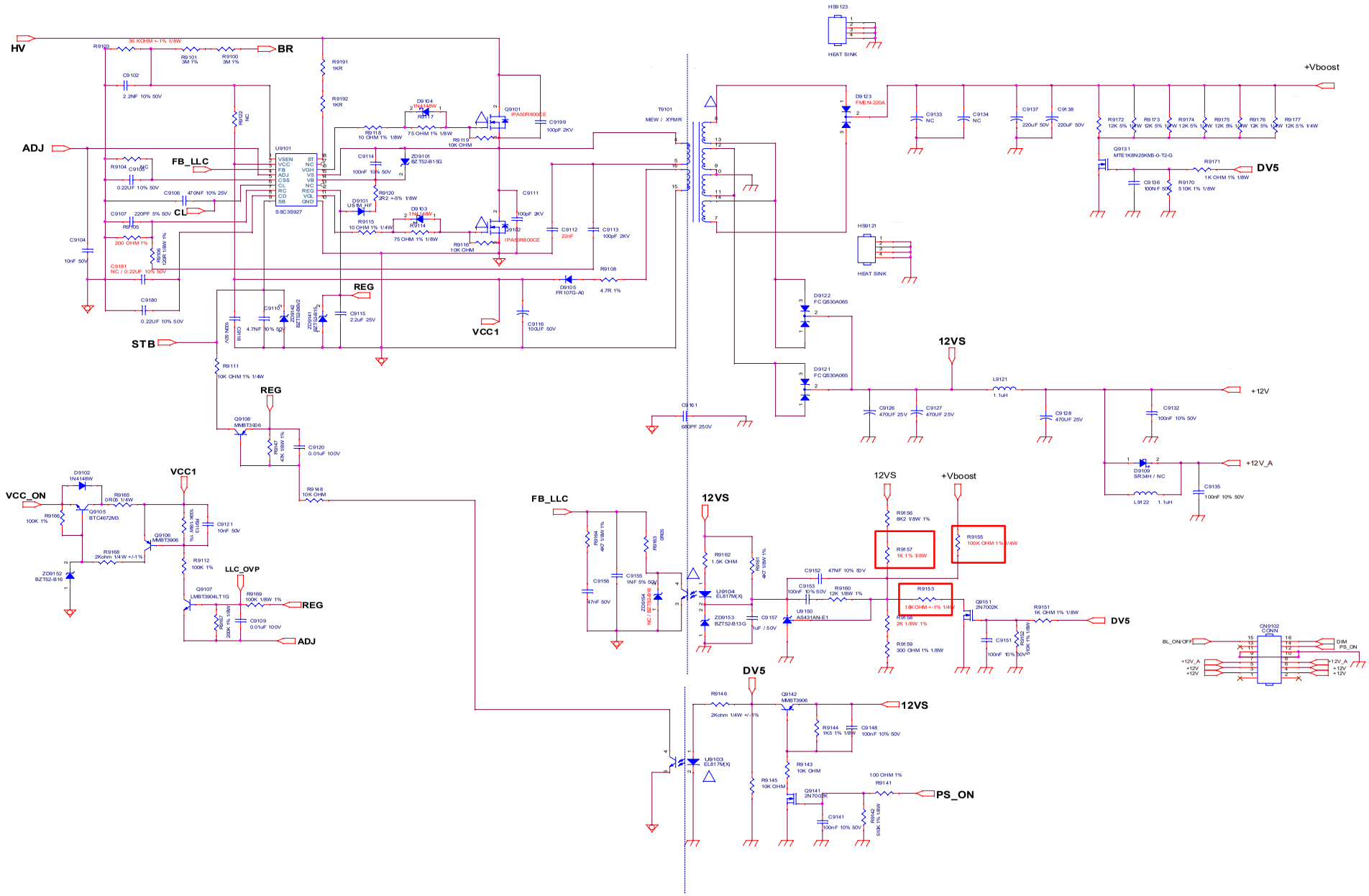

9-1-4 LED

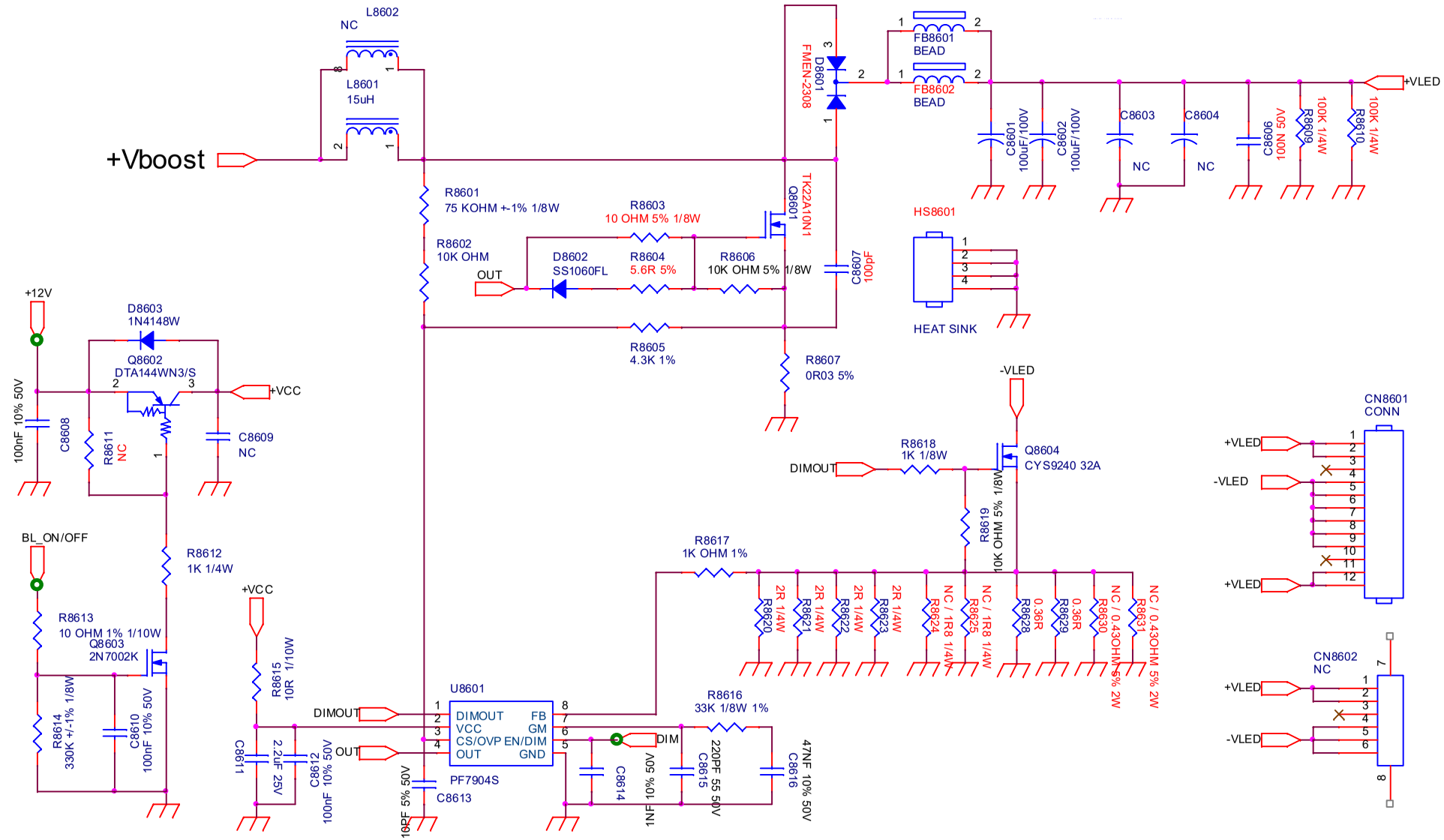
+Vboost
L8602
NC
L8601
15uH
R8601
75 KOHM +-1% 1/8W
R8602
10K OHM
OUT
D8602
SS1060FL
R8603
10 OHM 5% 1/8W
R8604
5.6R 5%
R8606
10K OHM 5% 1/8W
R8605
4.3K 1%
Q8601
TK22A10N1
C8607
100pF
R8607
0R03 5%
D8601
FMEN-2308
FB8601
BEAD
FB8602
BEAD
C8601
100uF/100V
C8602
100uF/100V
C8603
NC
C8604
NC
C8606
100NF 50V
R8609
100K 1/4W
R8610
100K 1/4W
+VLED
HS8601
HEAT SINK
+12V
D8603
1N4148W
Q8602
DTA144WN3/S
+VCC
100nF 10% 50V
C8608
R8611
NC
C8609
NC
BL_ON/OFF
R8612
1K 1/4W
R8613
10 OHM 1% 1/10W
Q8603
2N7002K
R8614
330K +/-1% 1/8W
C8610
100nF 10% 50V
R8615
10R 1/10W
C8611
2.2uF 25V
C8612
100nF 10% 50V
C8613
10pF 5% 50V
U8601
DIMOUT
VCC
CS/OVP
OUT
FB
GM
EN/DIM
GND
PF7904S
DIMOUT
OUT
DIM
C8614
1NF 10% 50V
R8616
33K 1/8W 1%
C8615
220PF 55 50V
C8616
47NF 10% 50V
R8617
1K OHM 1%
R8618
1K 1/8W
DIMOUT
-VLED
Q8604
CYS9240 32A
R8619
10K OHM 5% 1/8W
R8620
2R 1/4W
R8621
2R 1/4W
R8622
2R 1/4W
R8623
2R 1/4W
R8624
NC / 1R8 1/4W
R8625
NC / 1R8 1/4W
R8628
0.36R
R8629
0.36R
R8630
NC / 0.43OHM 5% 2W
R8631
NC / 0.43OHM 5% 2W
CN8601
CONN
+VLED
-VLED
+VLED
CN8602
NC
+VLED
-VLED

9.2 A 715GA018 PSU(For 50” 85x5/9xx5 & 58” 85x5/9xx5 Series)

9-2-1 AC Input

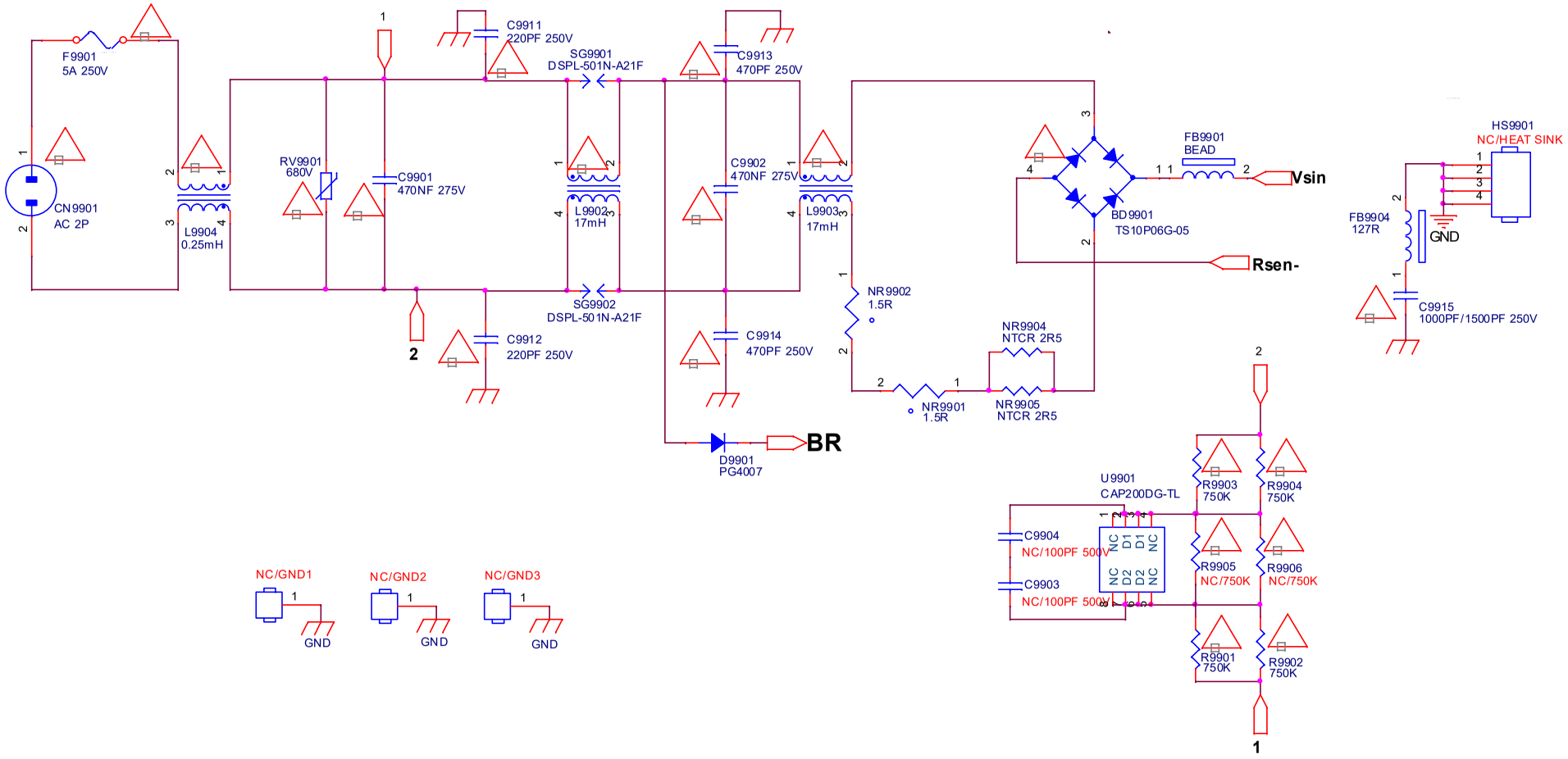

9-2-2 PFC with LD7592S

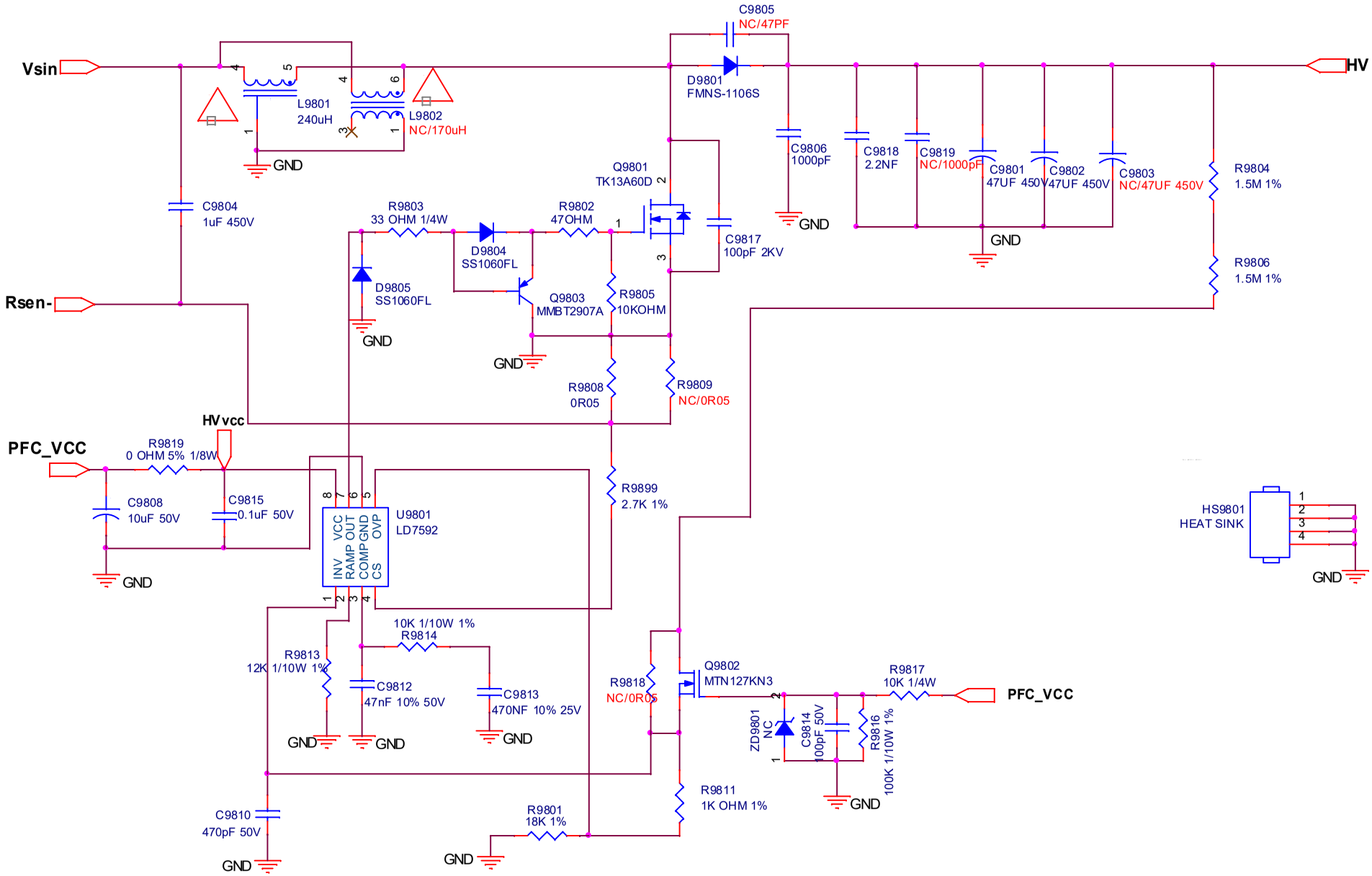

9-2-3 LLC with SSC3S927

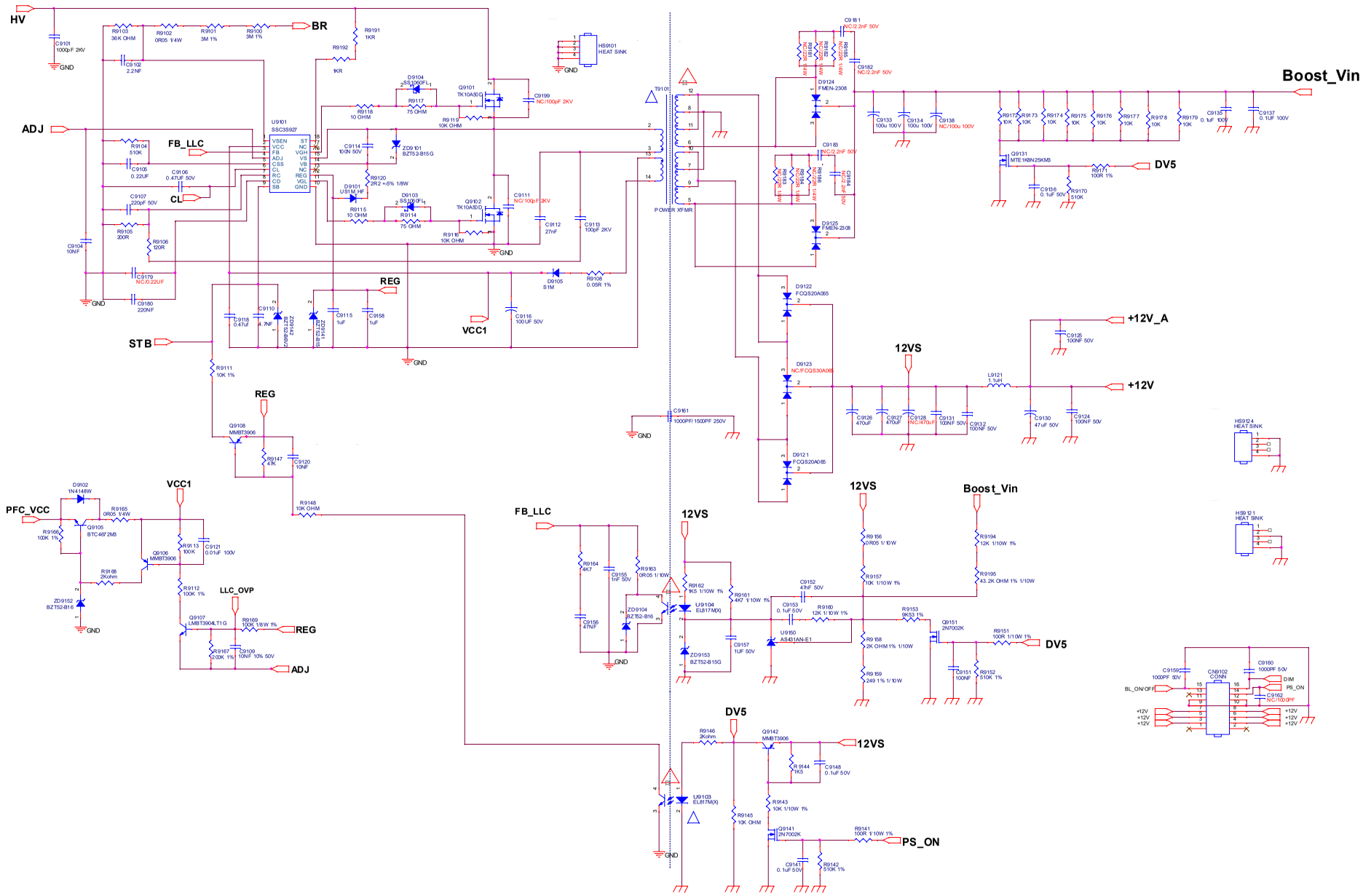

9-2-4 Driver with PF7904

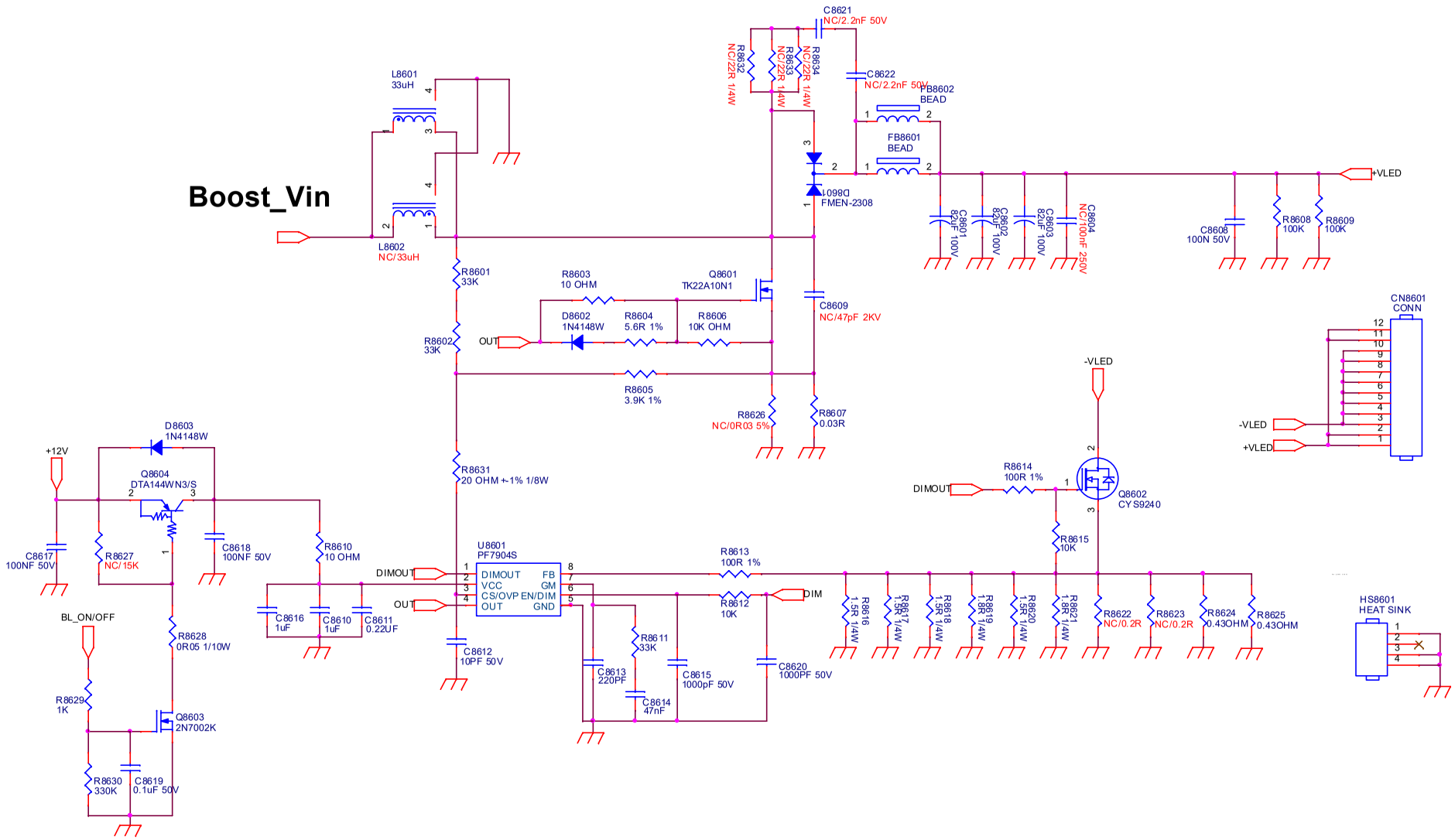

9.3 A 715GA025 PSU (For 55” 9435 & 65” 85x5/9xx5 & 70” 85x5/9xx5 Series)

9-3-1 AC Input

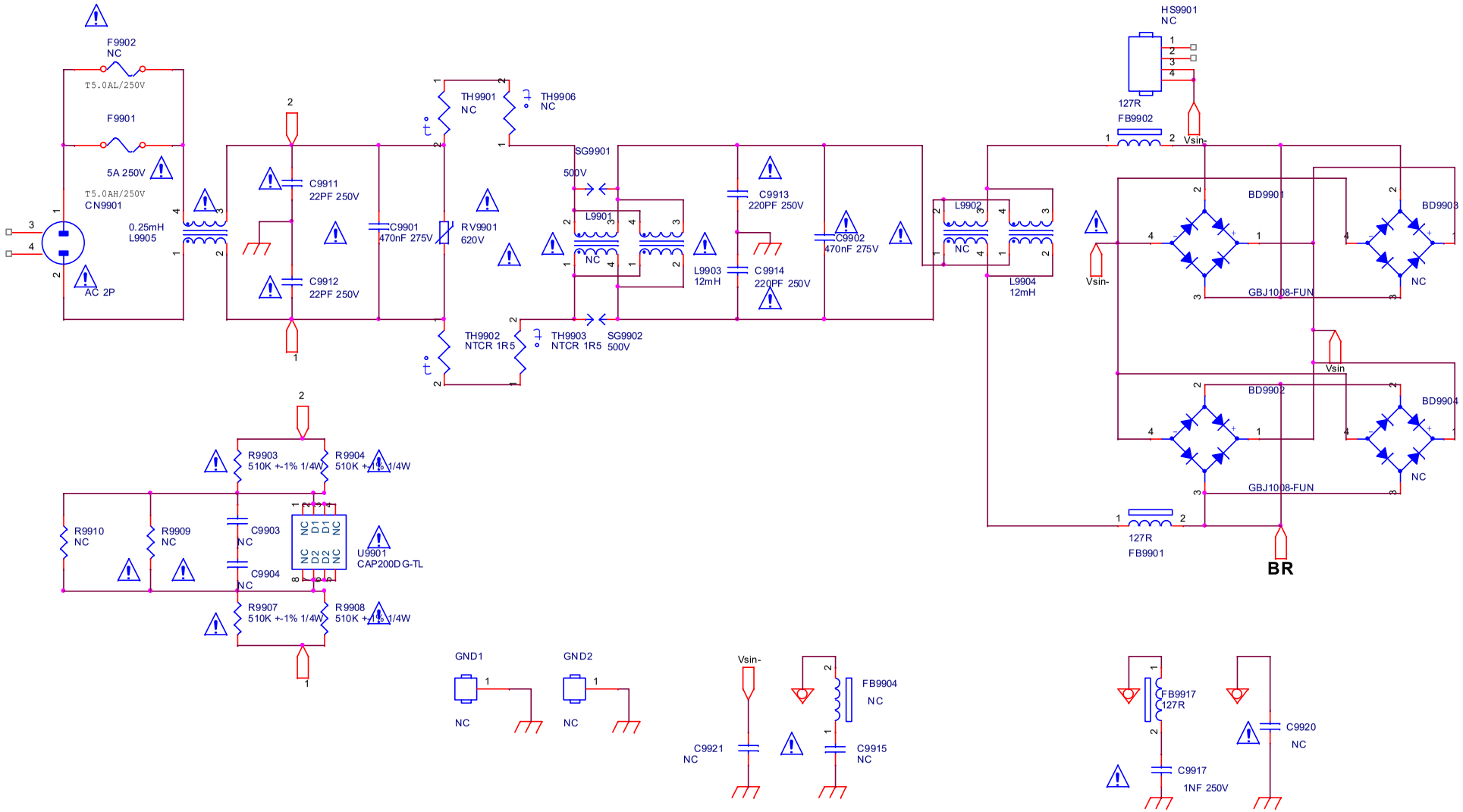

9-3-2 PFC with LD7592

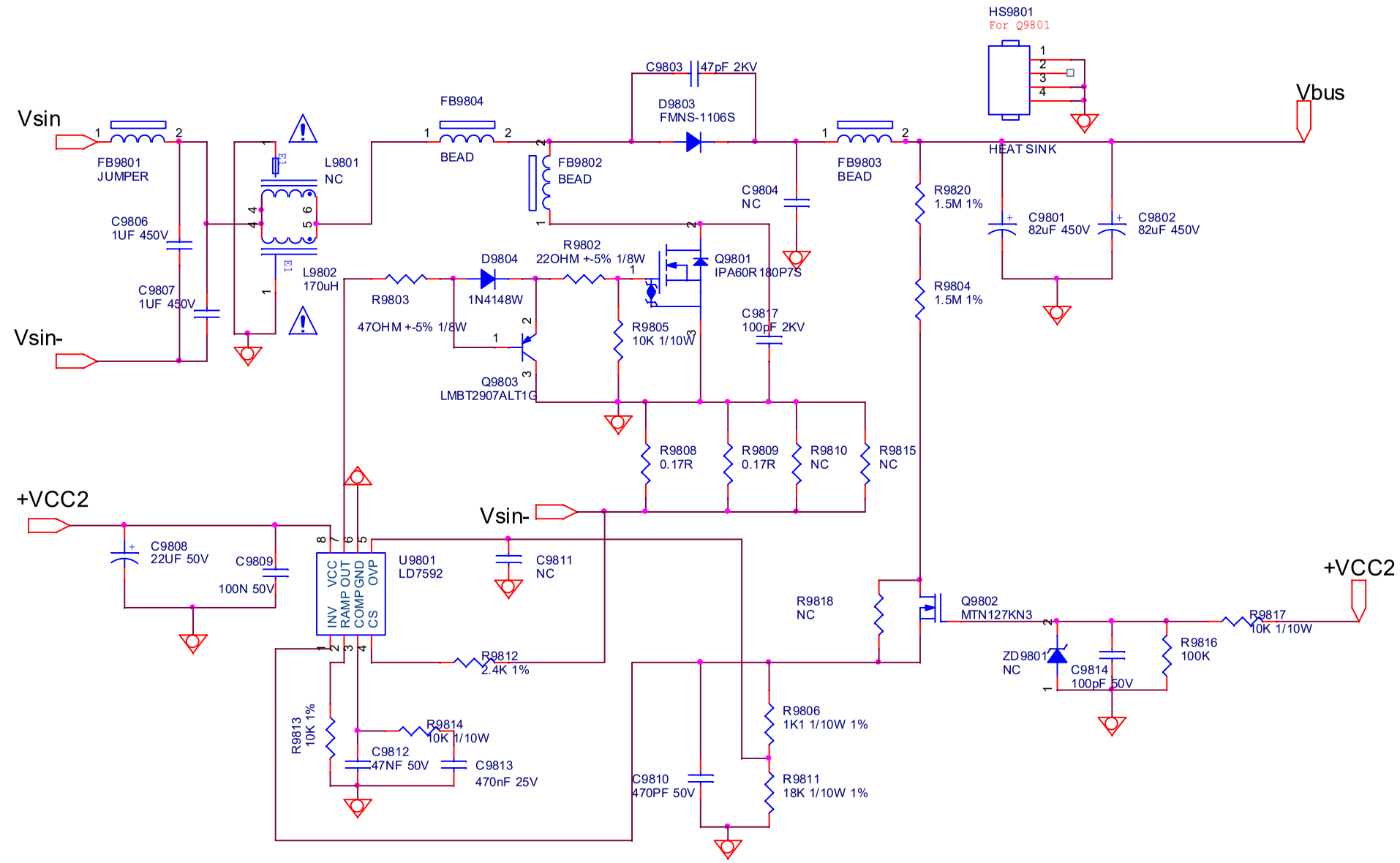

9-3-3 LLC with SSC3S927

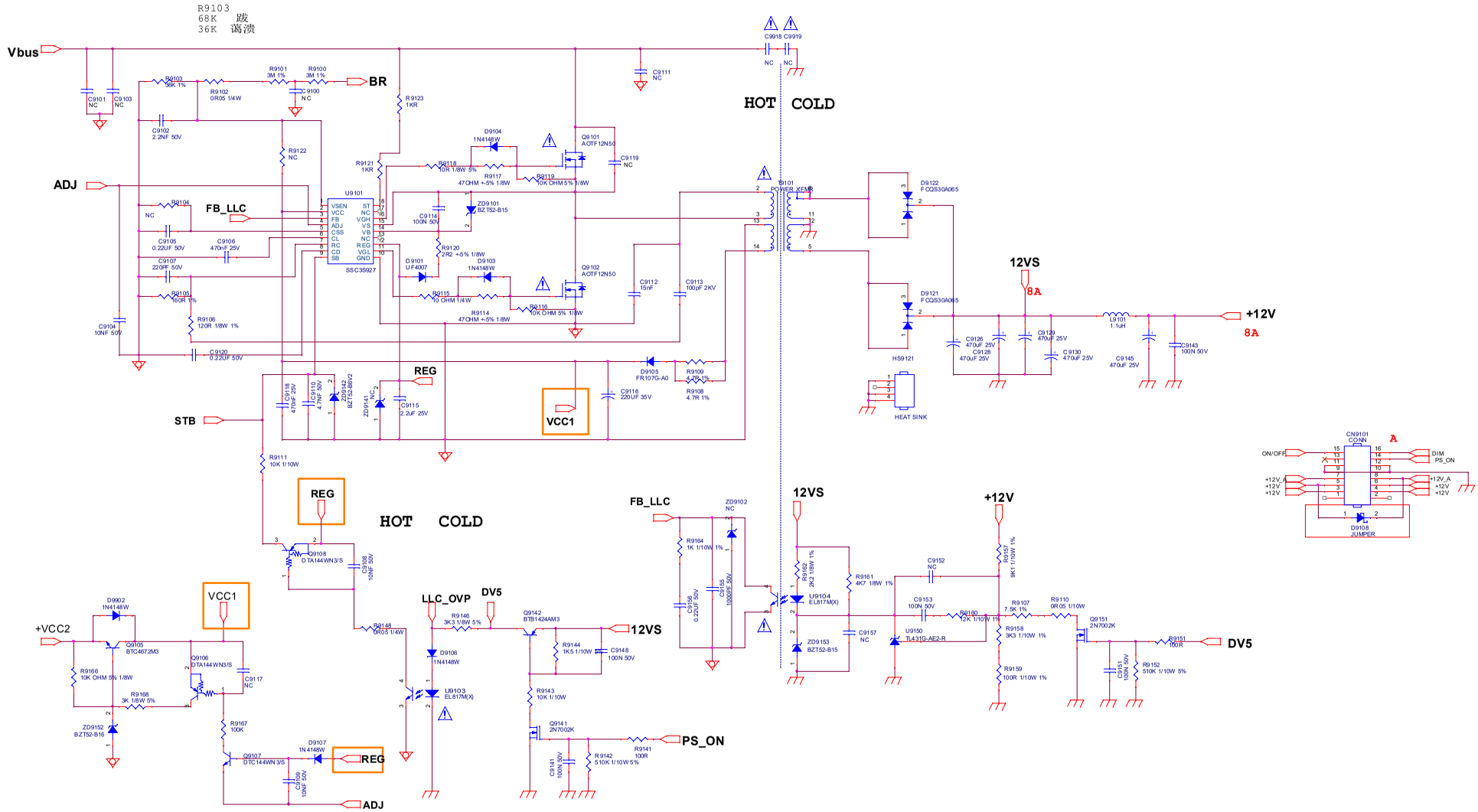

9-3-4 LLC SSC3S931 with PF7302

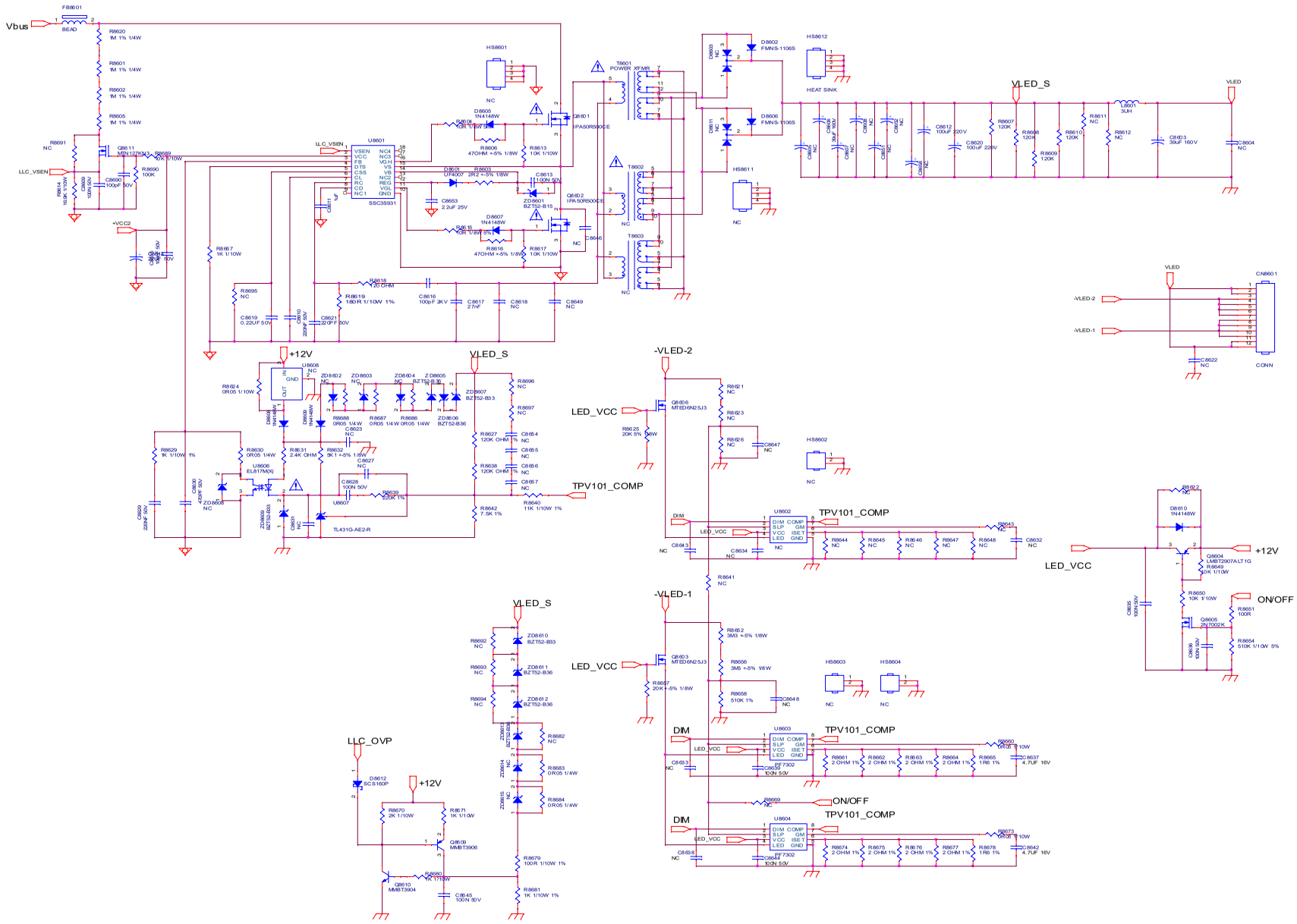

9-3-5 JUMPER

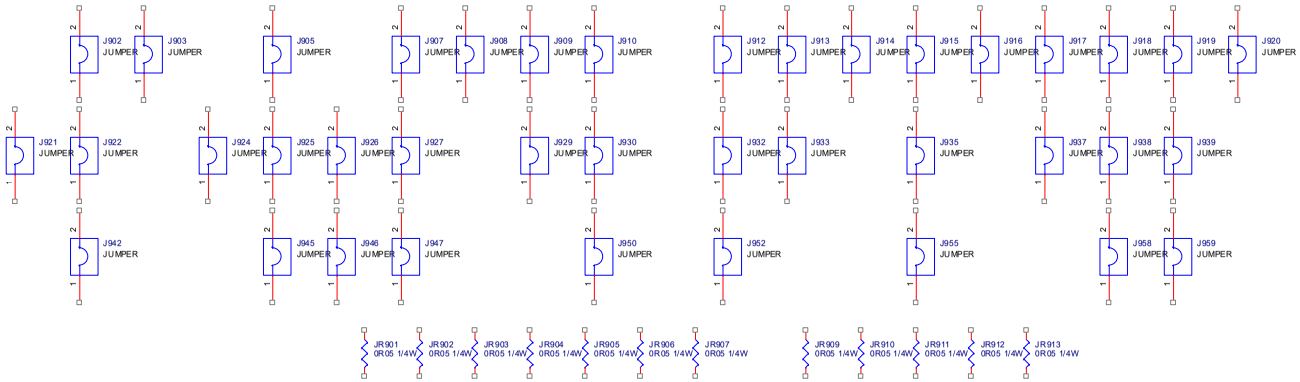
J902 JUMPER
J903 JUMPER
J905 JUMPER
J907 JUMPER
J908 JUMPER
J909 JUMPER
J910 JUMPER
J912 JUMPER
J913 JUMPER
J914 JUMPER
J915 JUMPER
J916 JUMPER
J917 JUMPER
J918 JUMPER
J919 JUMPER
J920 JUMPER
J921 JUMPER
J922 JUMPER
J924 JUMPER
J925 JUMPER
J926 JUMPER
J927 JUMPER
J929 JUMPER
J930 JUMPER
J932 JUMPER
J933 JUMPER
J935 JUMPER
J937 JUMPER
J938 JUMPER
J939 JUMPER
J942 JUMPER
J945 JUMPER
J946 JUMPER
J947 JUMPER
J950 JUMPER
J952 JUMPER
J955 JUMPER
J958 JUMPER
J959 JUMPER
JR901 0R05 1/4W
JR902 0R05 1/4W
JR903 0R05 1/4W
JR904 0R05 1/4W
JR905 0R05 1/4W
JR906 0R05 1/4W
JR907 0R05 1/4W
JR909 0R05 1/4W
JR910 0R05 1/4W
JR911 0R05 1/4W
JR912 0R05 1/4W
JR913 0R05 1/4W

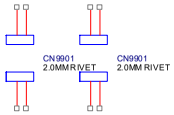
CN9901 2.0MM RIVET
CN9901 2.0MM RIVET

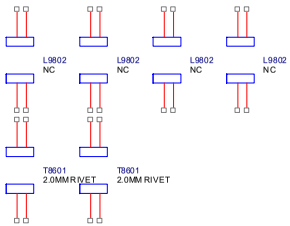
L9802 NC
L9802 NC
L9802 NC
L9802 NC
T8601 2.0MM RIVET
T8601 2.0MM RIVET

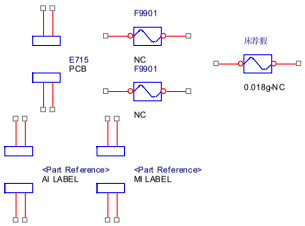
F9901
NC
E715 PCB
F9901
NC
床荐假
0.018g-NC
<Part Reference>
AI LABEL
<Part Reference>
MI LABEL

9.4 B 715GA006M SSB(For 85x5 & 9xx5 Series)

9-4-1 SOC-EMMC

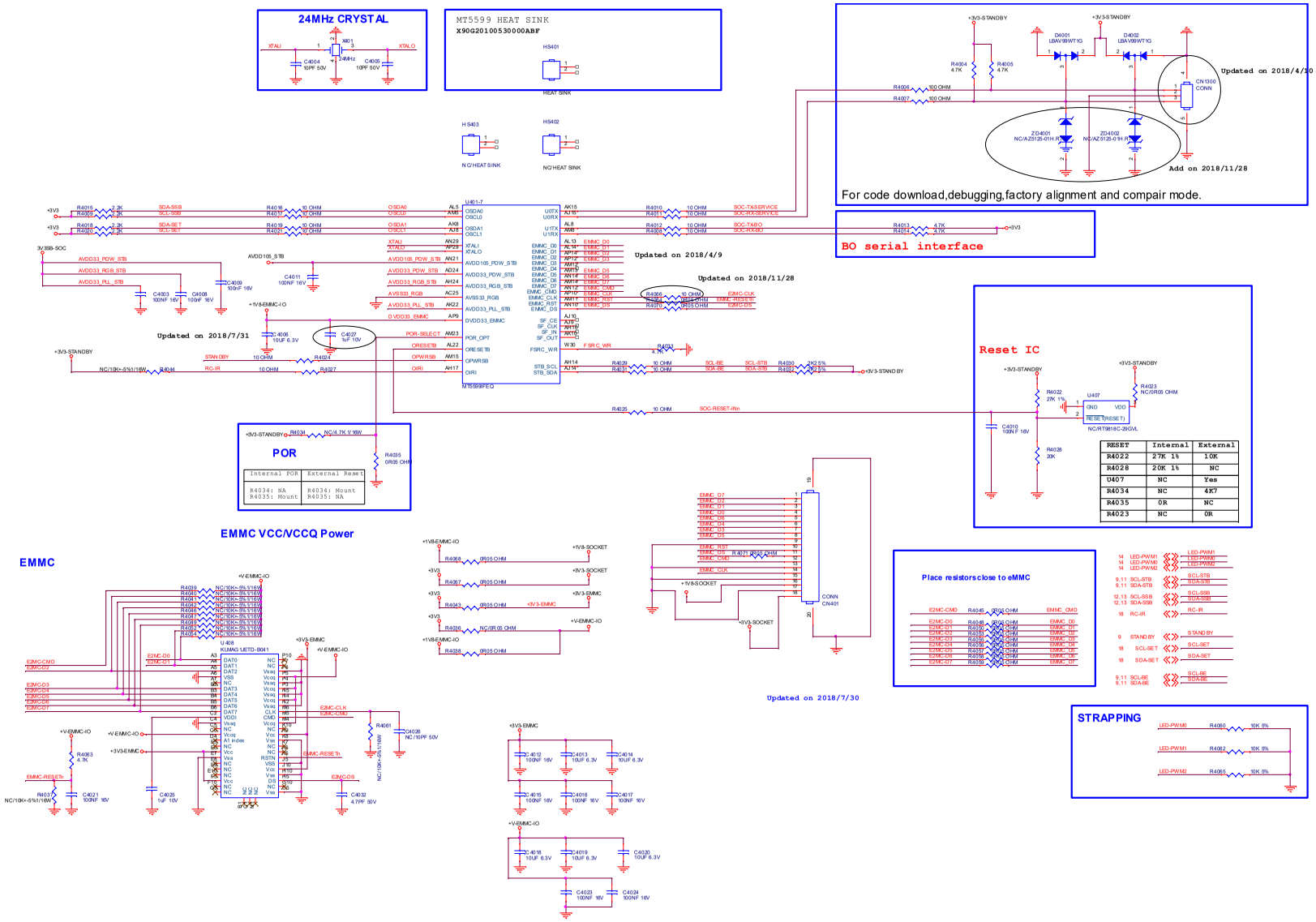

9-4-2 SOC-DDR4-1-2

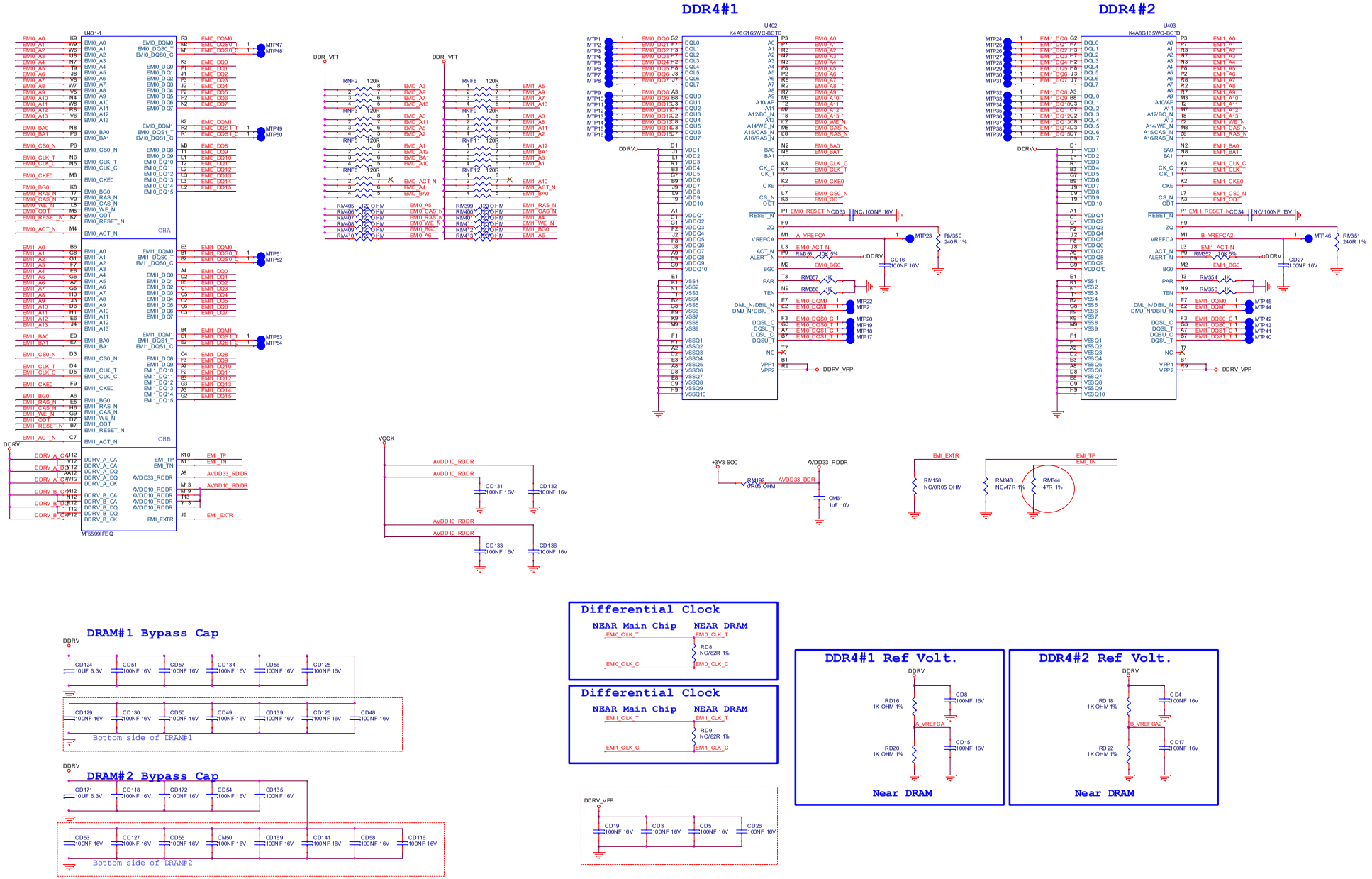

9-4-3 SOC-DDR4-3-4

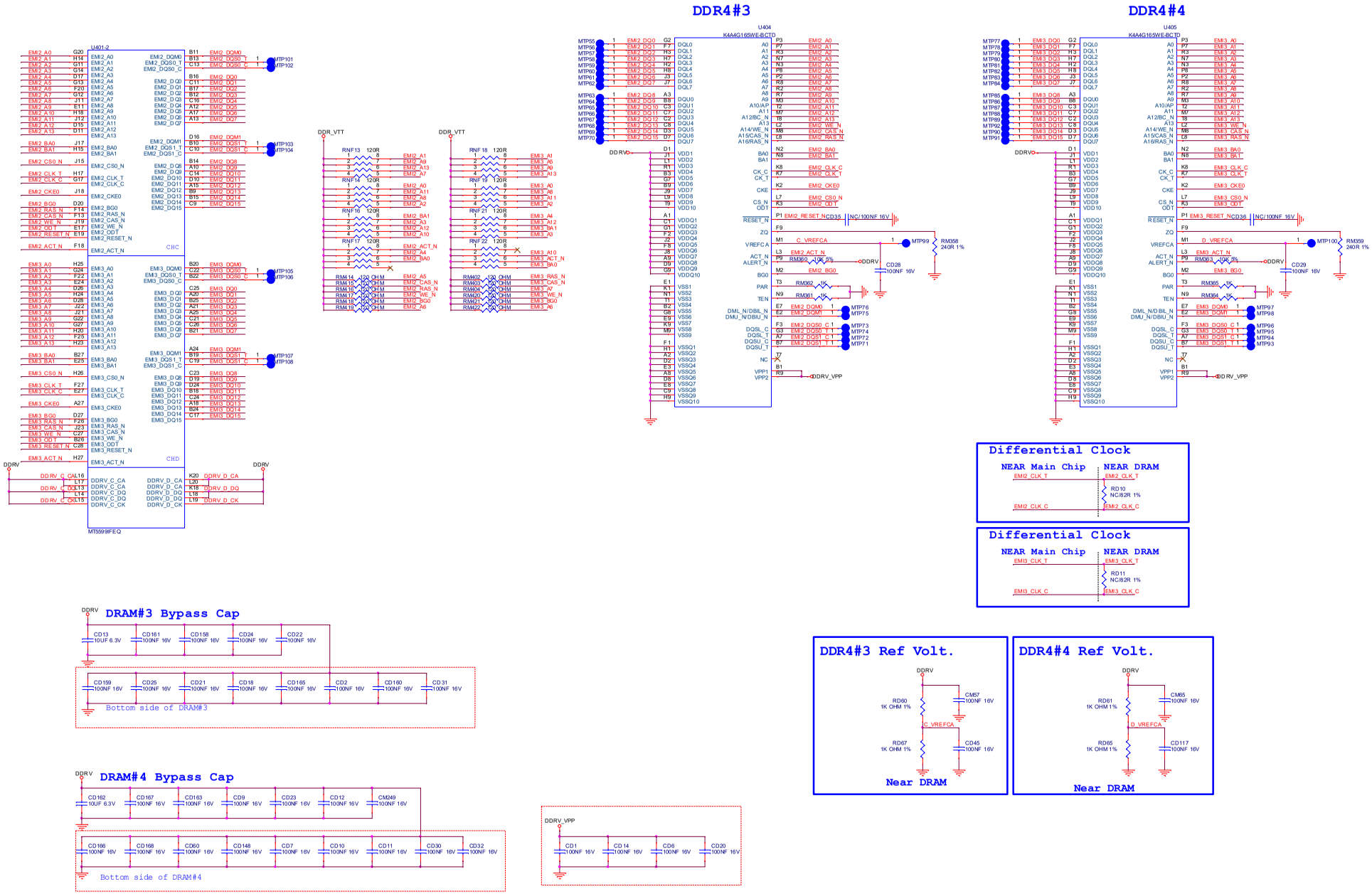

9-4-4 DDR POWER

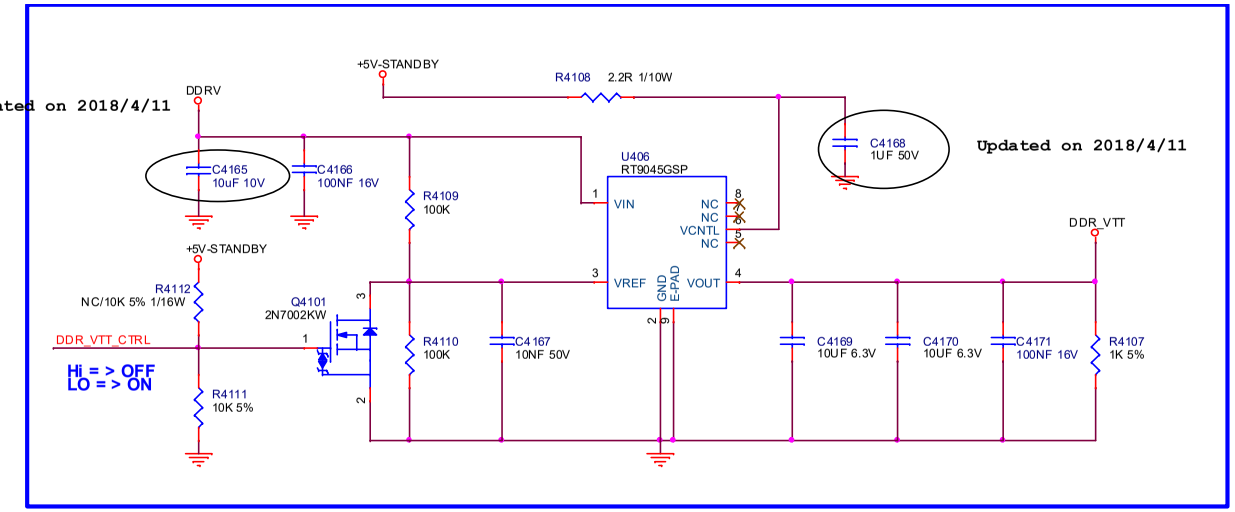

14 DDR_VTT_CTRL << >> DDR_VTT_CTRL

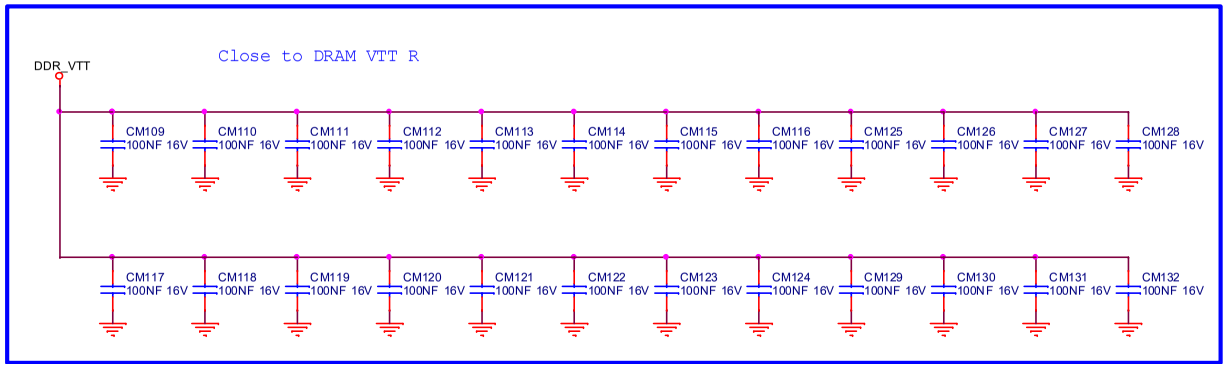

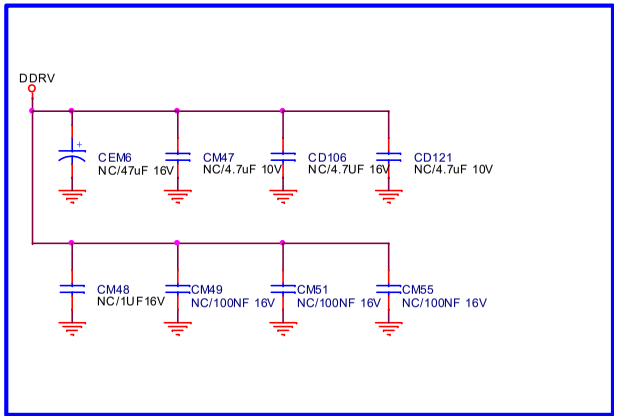

9-4-5 FE-TUNER-DEMOD

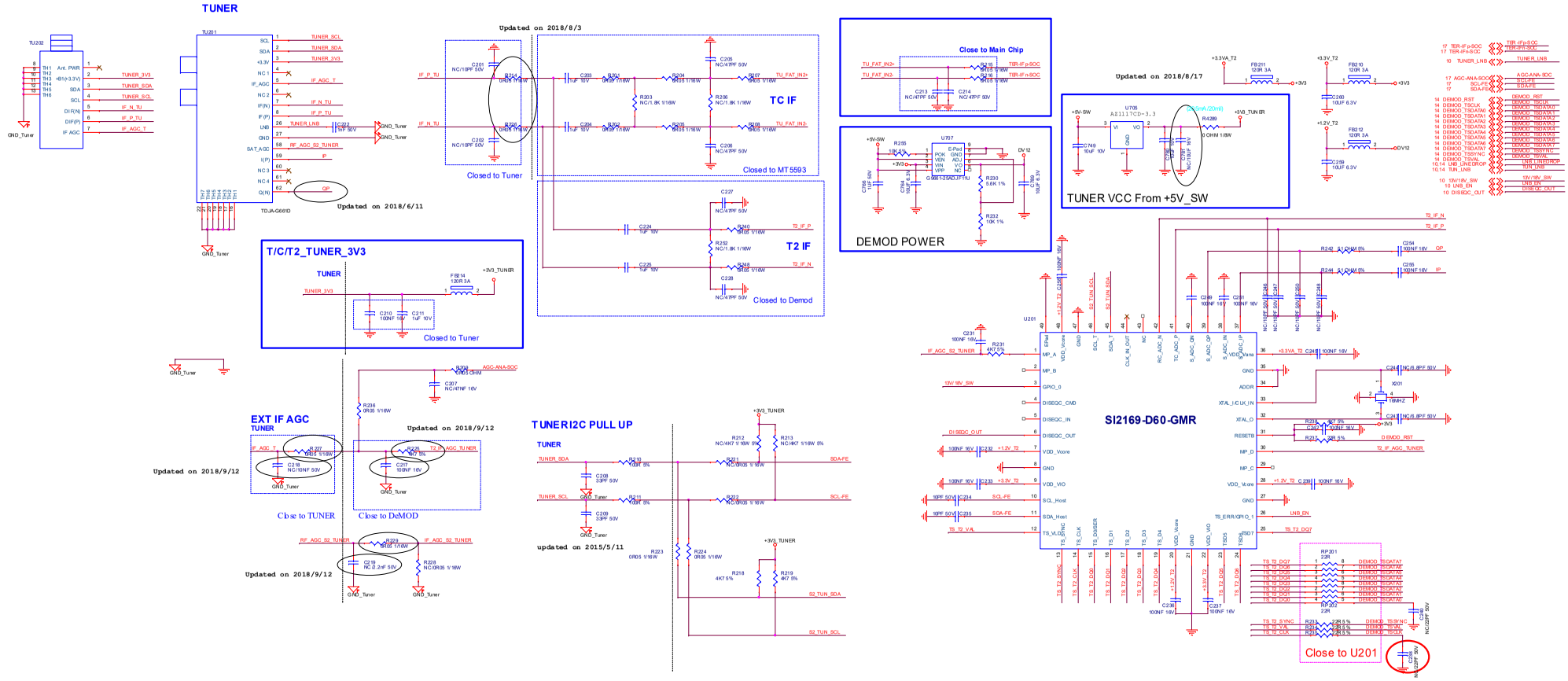

DVB-T/T2 Demodulator

Model	Demod	R223/R224	R221/R222	R220/R217/C215/C216	R225/C217	R229/C219	C249/C251
~~H~~	~~NC~~	~~NC~~	~~Yes~~	~~NC~~	~~NC~~	~~NC~~	~~NC~~
T	T/C/T2 Si2168	Yes	NC	NC	Yes	NC	NC
~~K~~	~~T/C/S2 Si2167~~	~~Yes~~	~~NC~~	~~Yes~~	~~NC~~	~~Yes~~	~~Yes~~
~~K~~	~~S2 Si2166~~	~~NC~~	~~Yes~~	~~Yes~~	~~NC~~	~~Yes~~	~~Yes~~
S	T/C/T2/S2 Si2169	Yes	NC	Yes	Yes	Yes	Yes

9-4-6 SOC-VB1-OUT

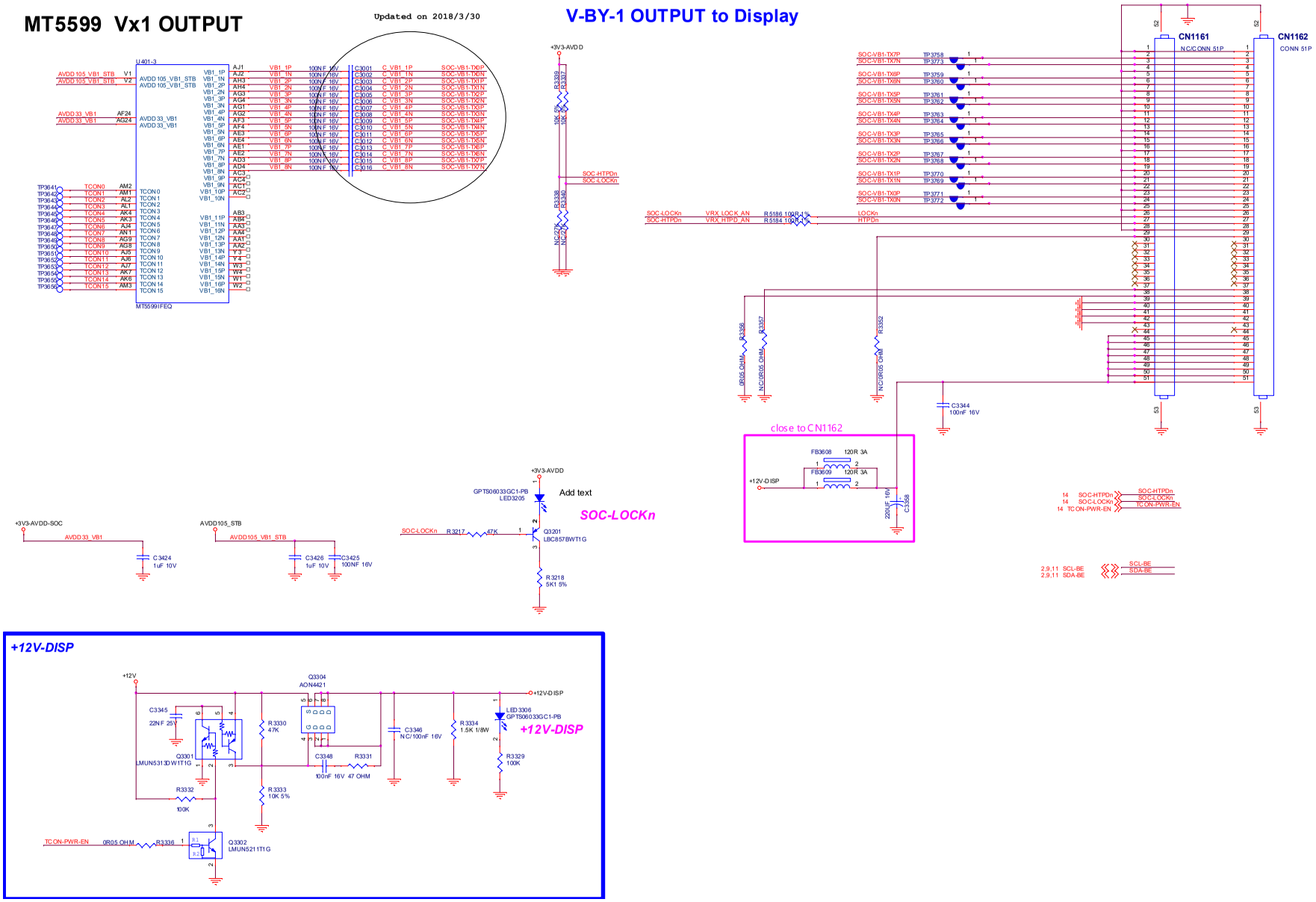

9-4-7 DCDC-SOC-VCCK-DVSS

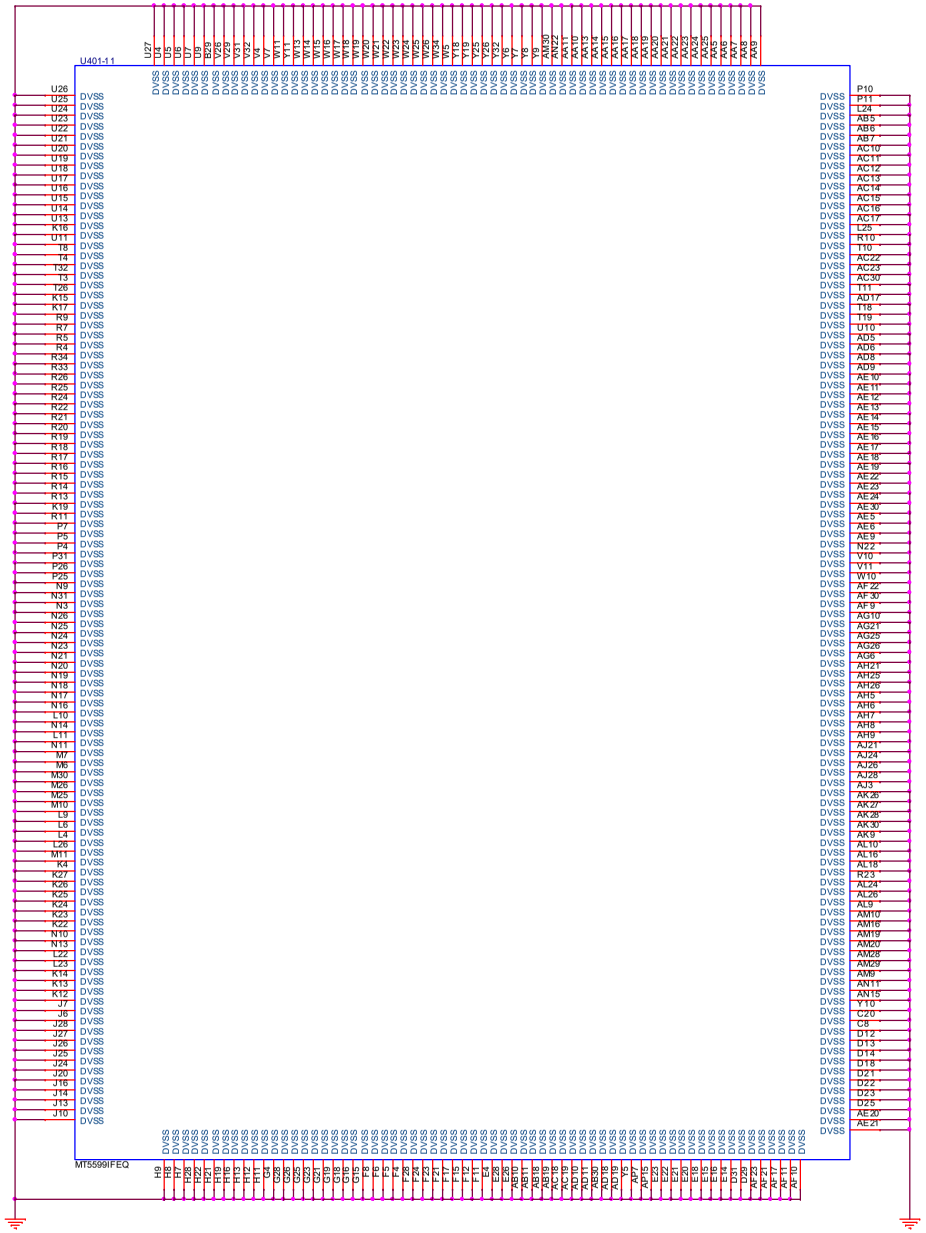

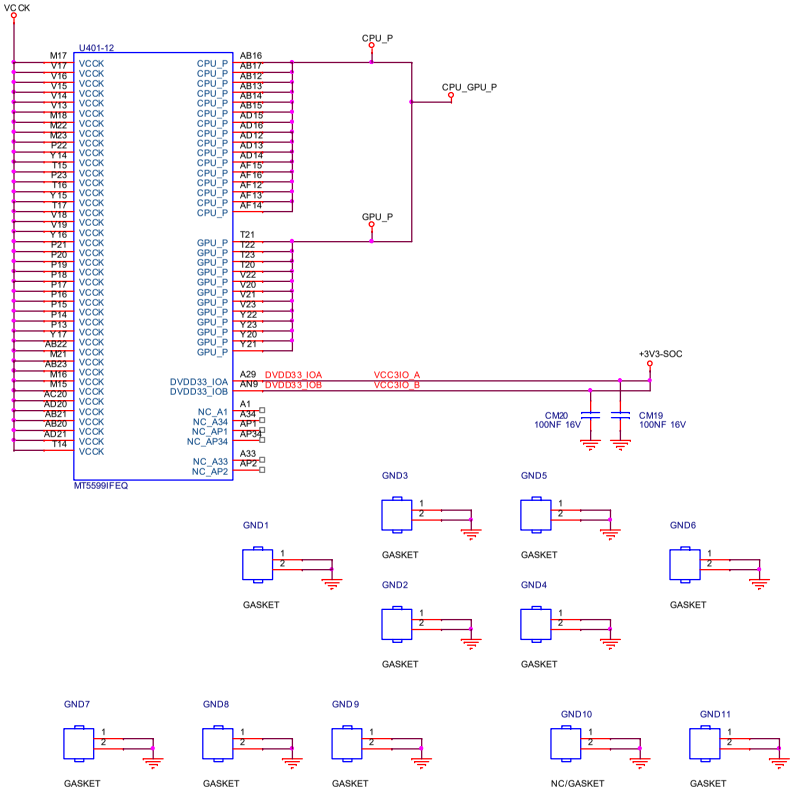

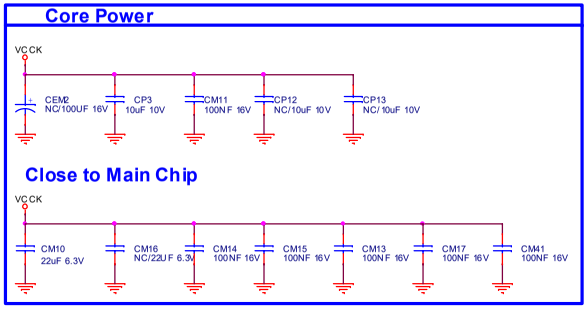

9-4-8 DCDC-SYSTEM-POWER1

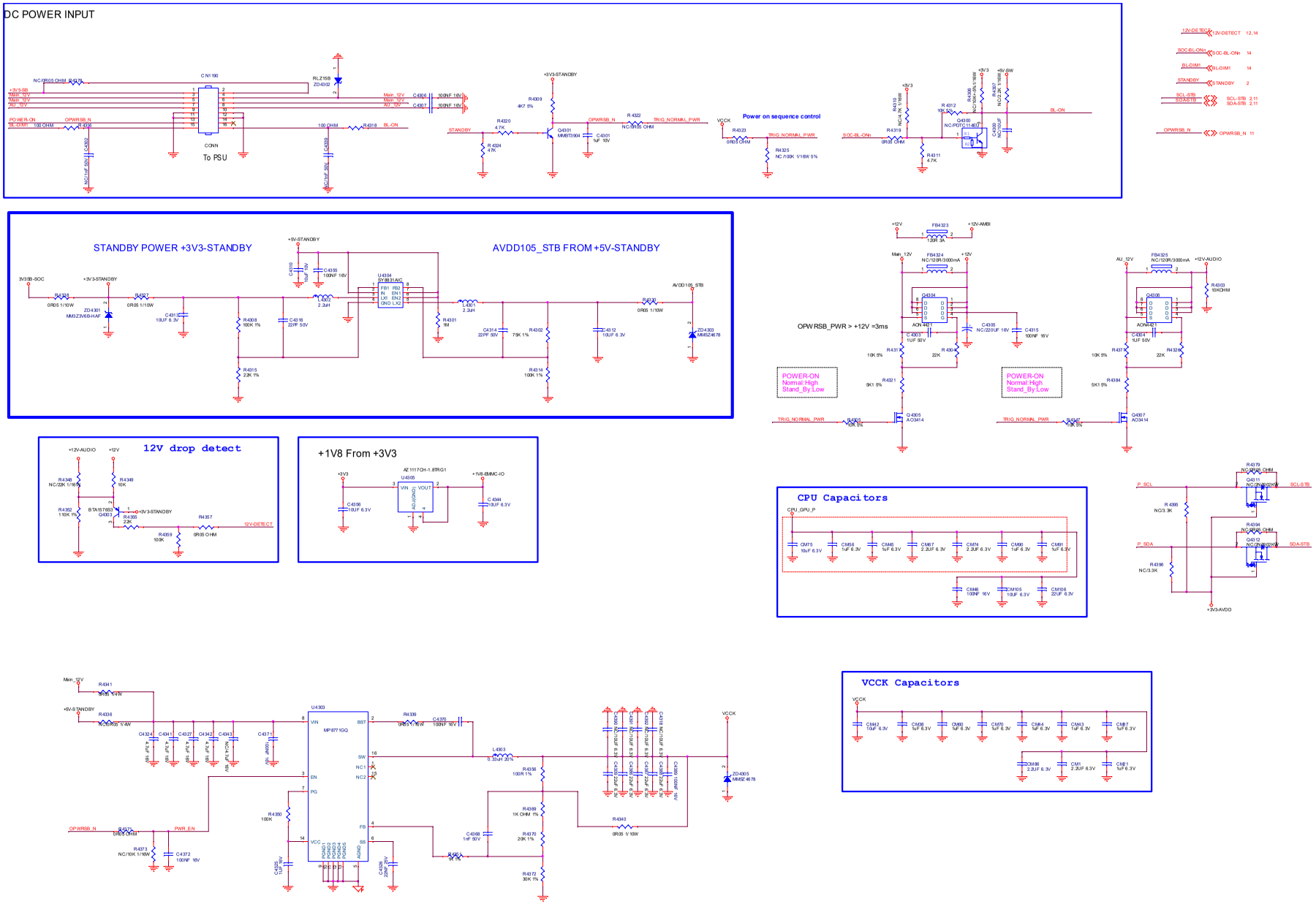

9-4-9 DCDC-SYSTEM-POWER2

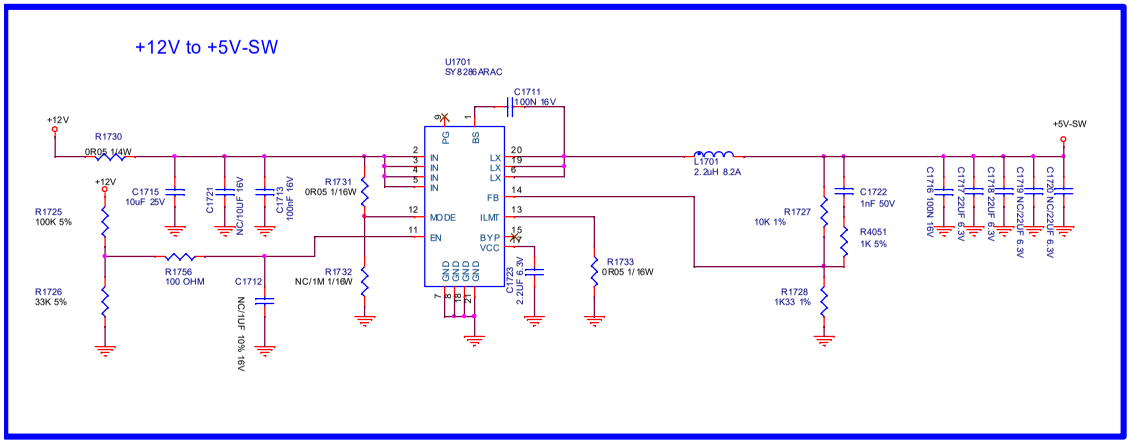

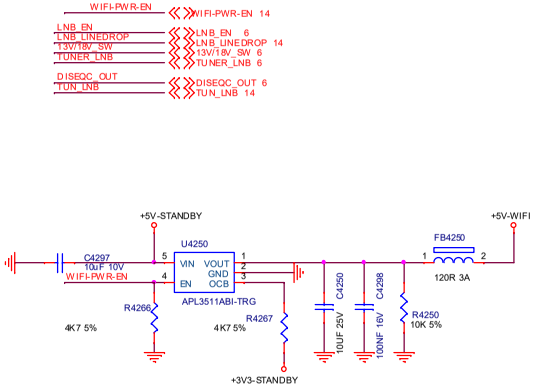

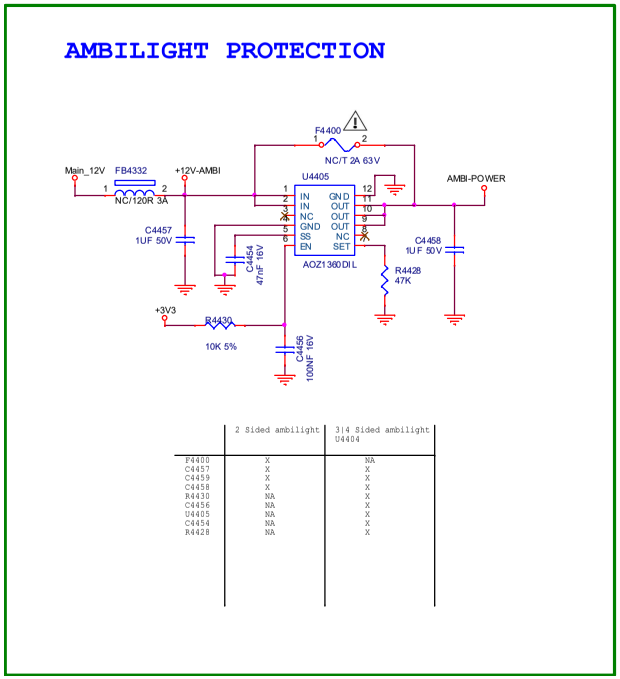

	2 Sided ambilight	3|4 Sided ambilight U4404
F4400	X	NA
C4457	X	X
C4459	X	X
C4458	X	X
R4430	NA	X
C4456	NA	X
U4405	NA	X
C4454	NA	X
R4428	NA	X

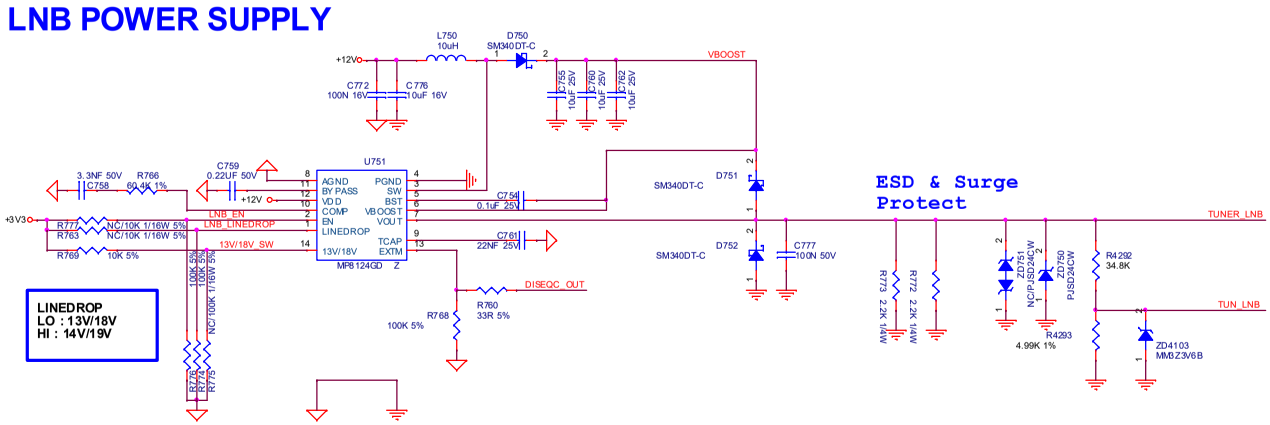

9-4-10 DCDC-SYSTEM-POWER3

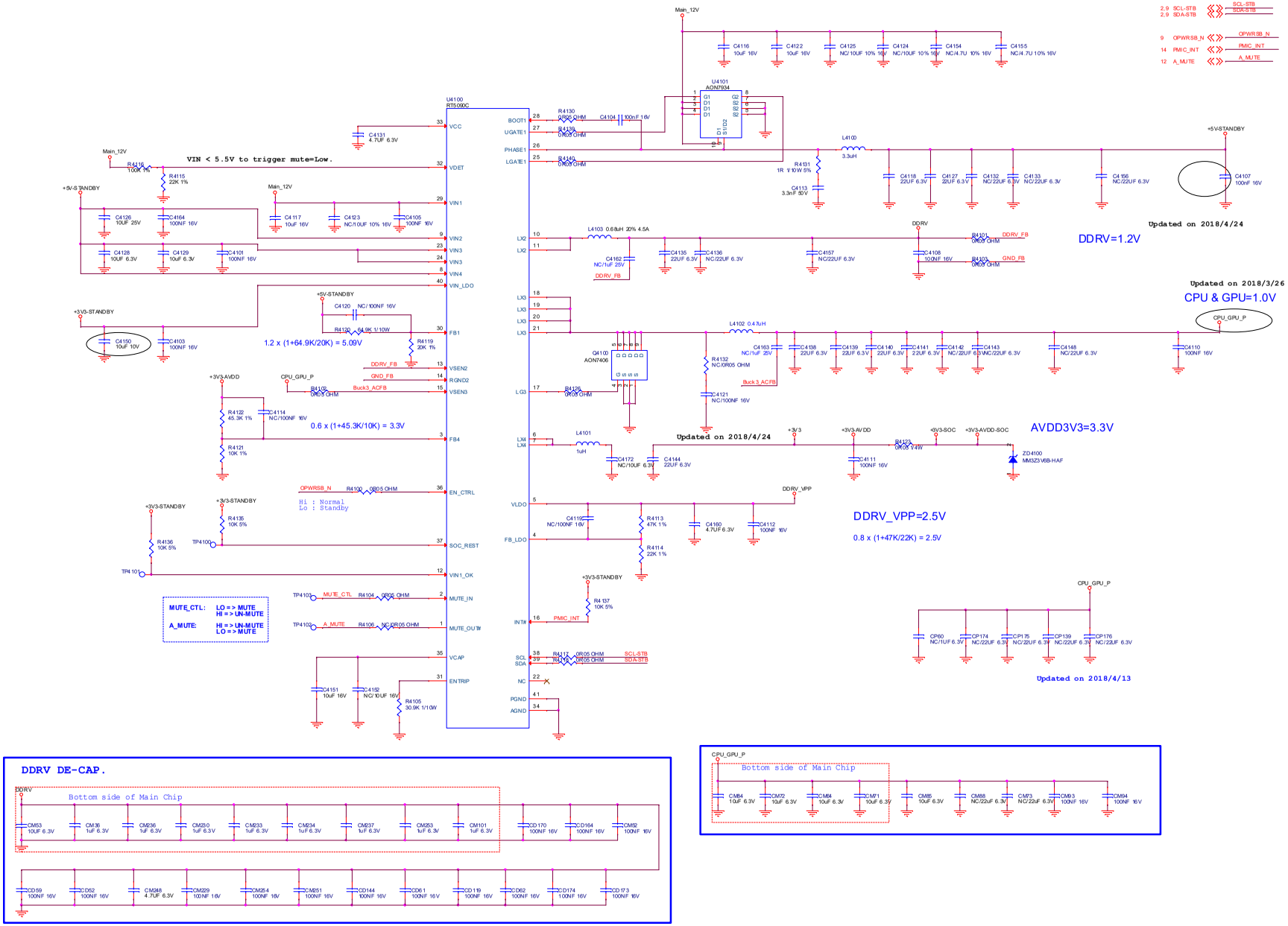

9-4-11 AUDIO-1st-CLASS-D-AMP

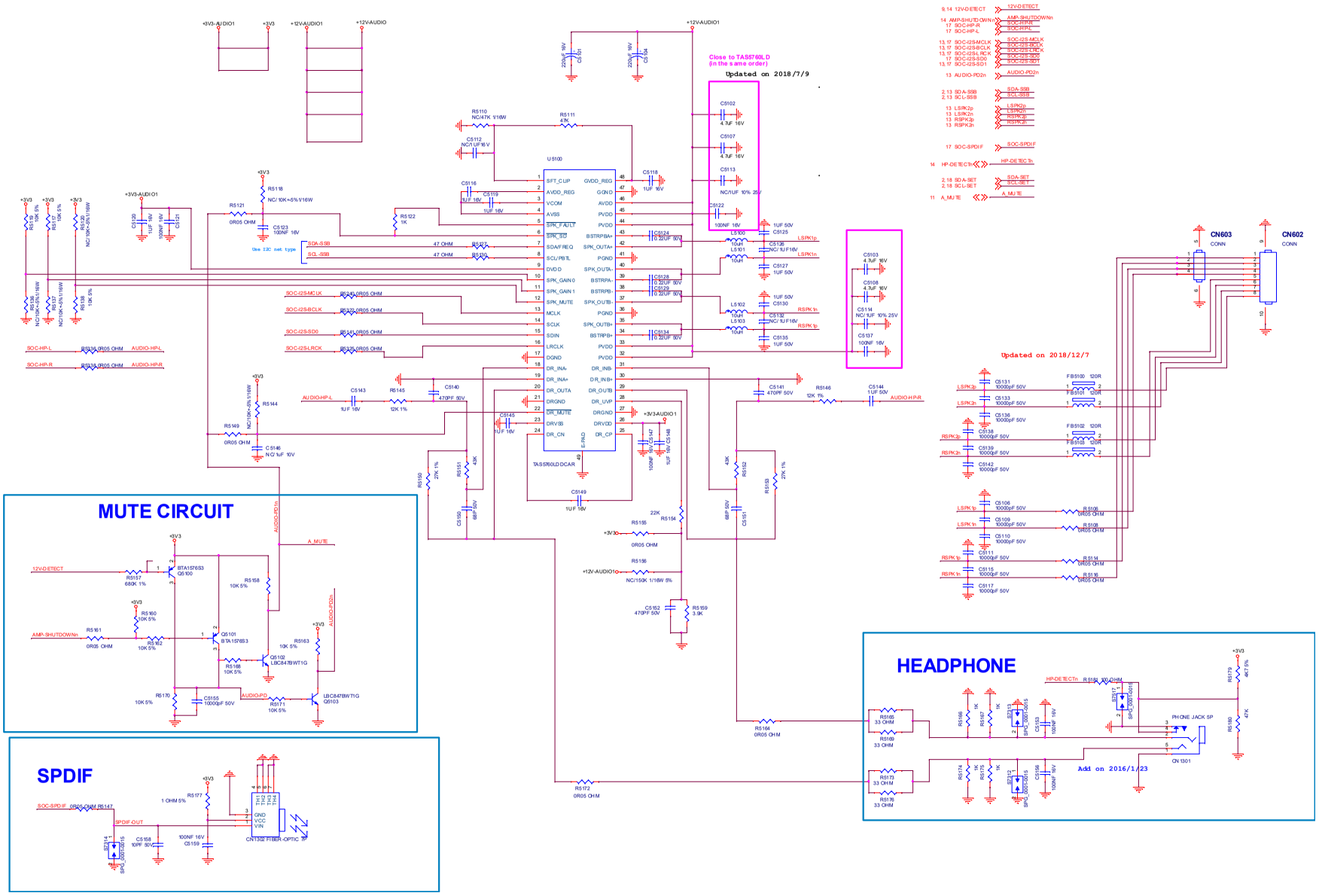

9-4-12 AUDIO-2nd-CLASS-D-AMP

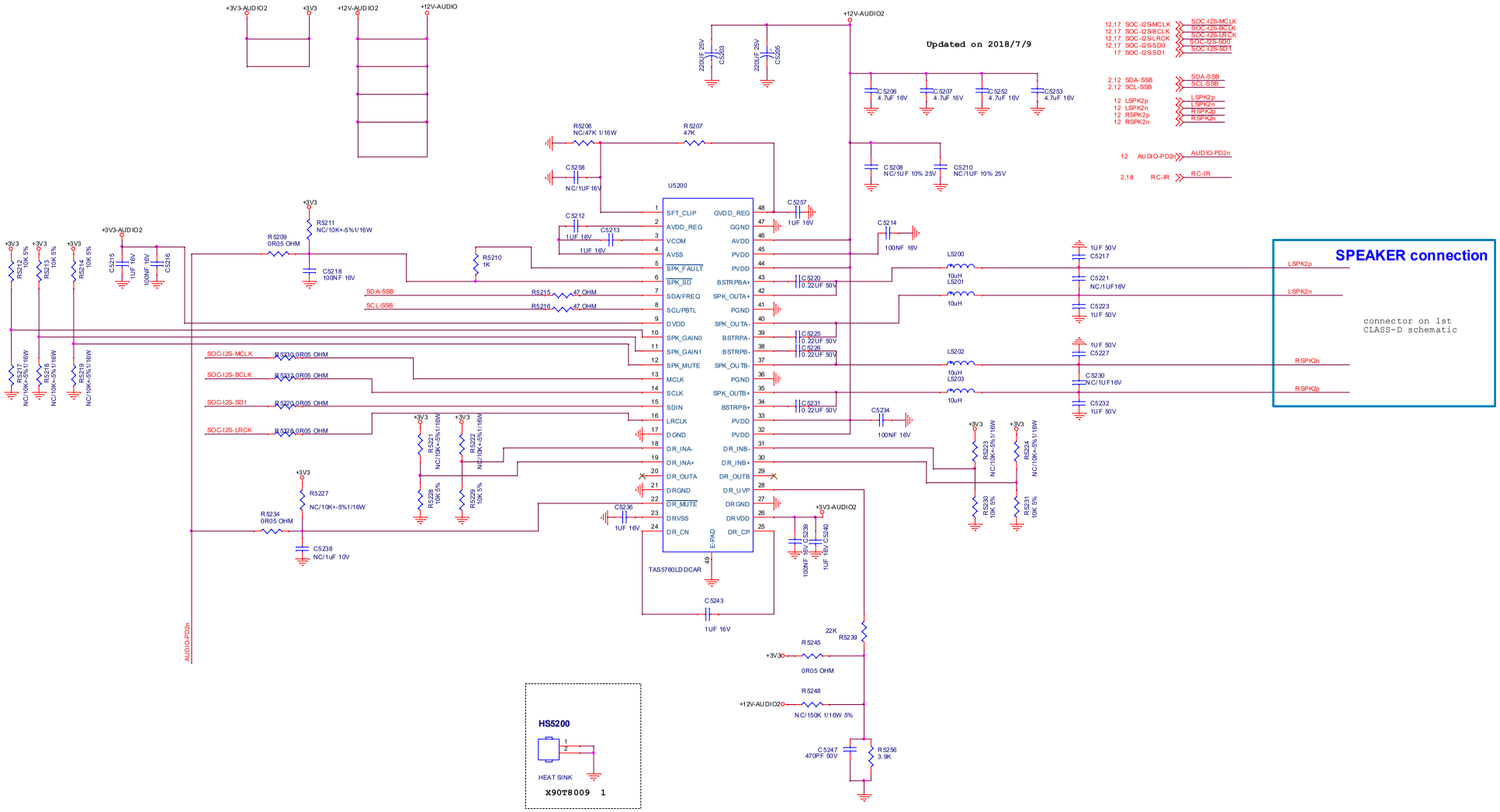

9-4-13 PCMCIA

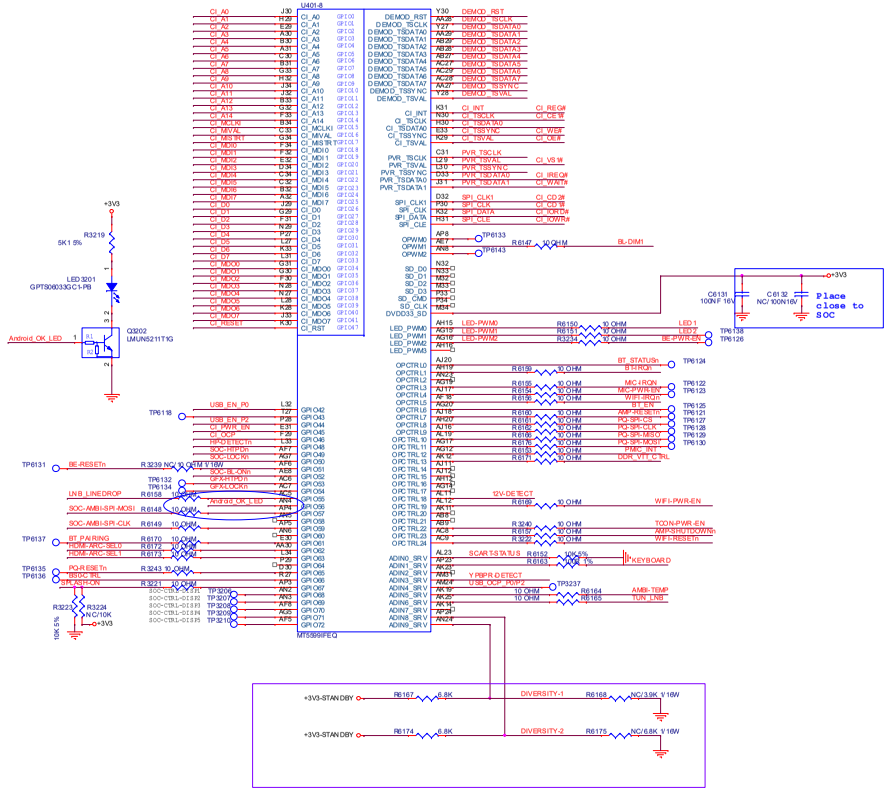

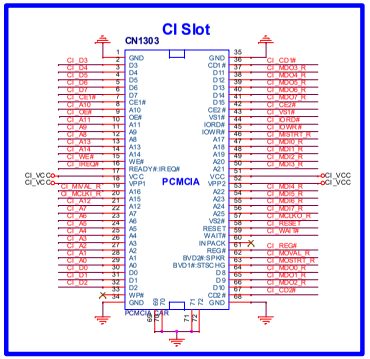

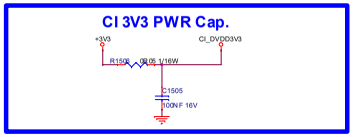

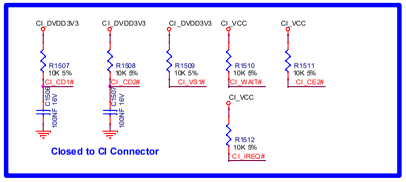

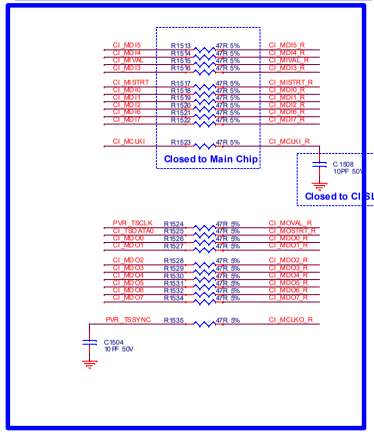

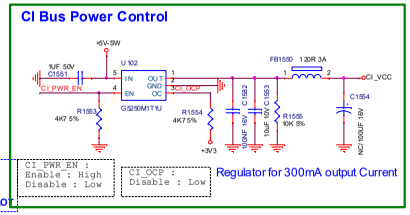

Parrel TS Output to PCMCIA damping used to close Main Chip	Parrel TS Output to Main Chip damping used to close PCMCIA
CI_MISTRT	CI_MOSTRT
CI_MIVAL	CI_MOVAL
CI_MCLKI	CI_MCLKO
CI_MDI0	CI_MDO0
CI_MDI1	CI_MDO1
CI_MDI2	CI_MDO2
CI_MDI3	CI_MDO3
CI_MDI4	CI_MDO4
CI_MDI5	CI_MDO5
CI_MDI6	CI_MDO6
CI_MDI7	CI_MDO7

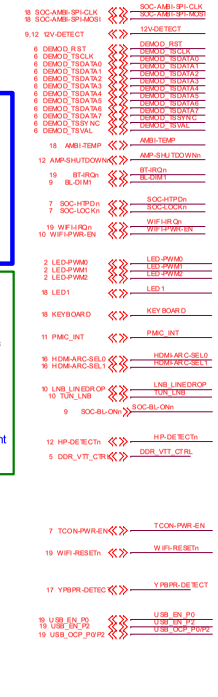

9-4-14 HDMI-INPUTS

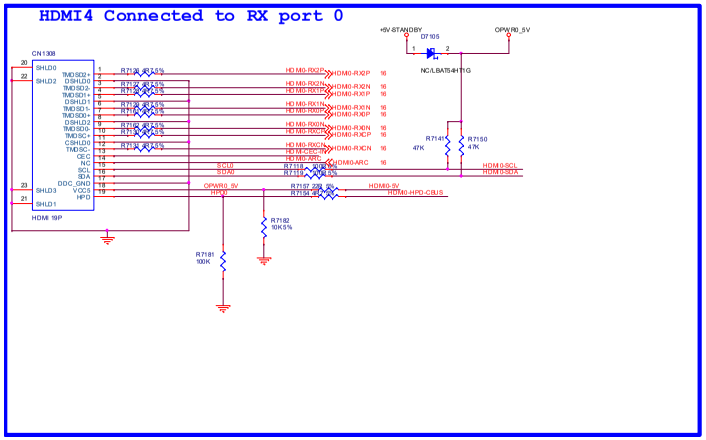

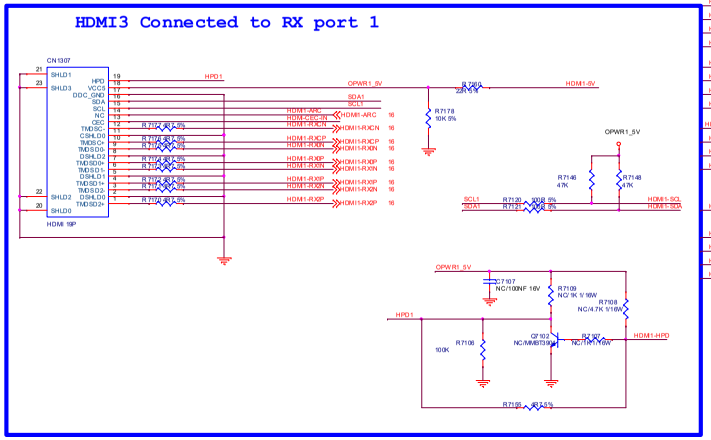

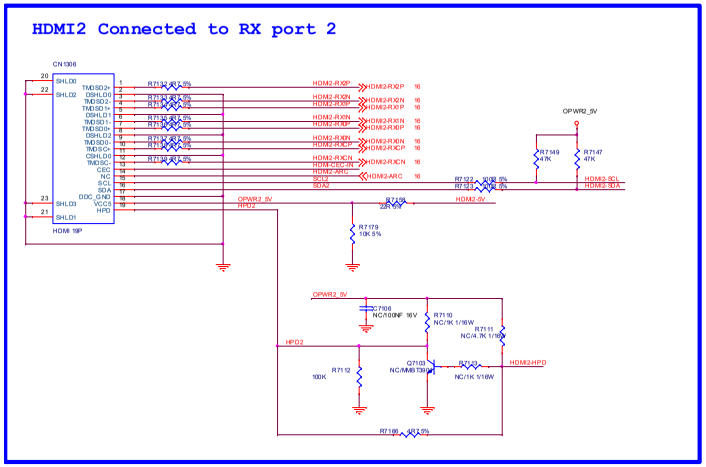

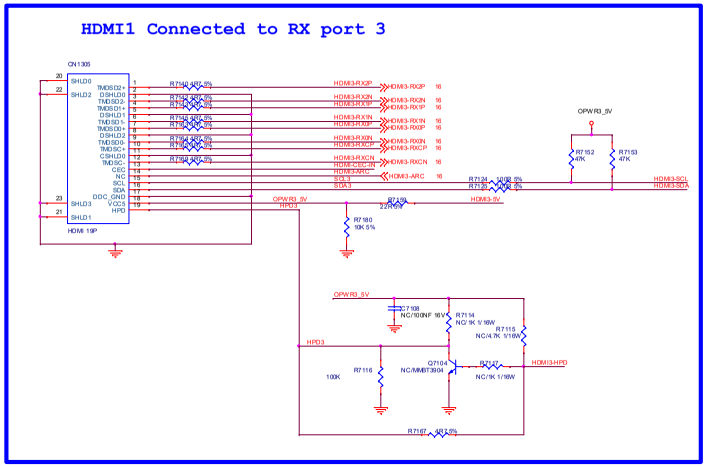

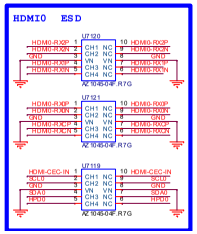

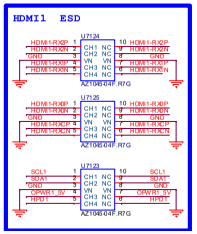

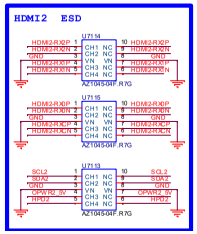

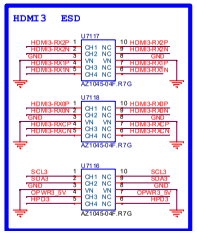

9-4-15 HDMI-SOC-ARC

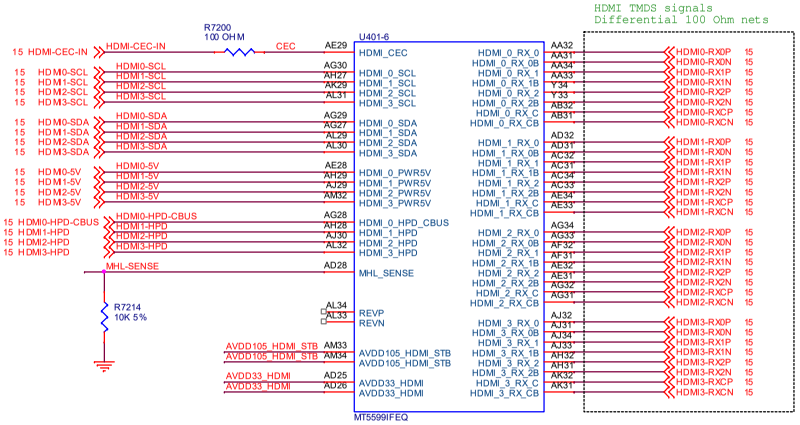

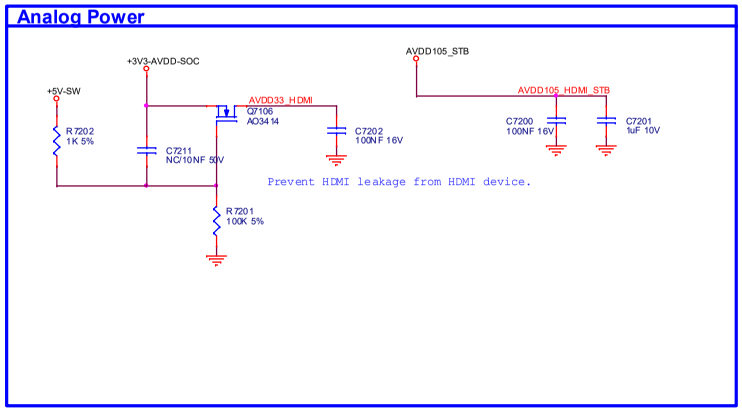

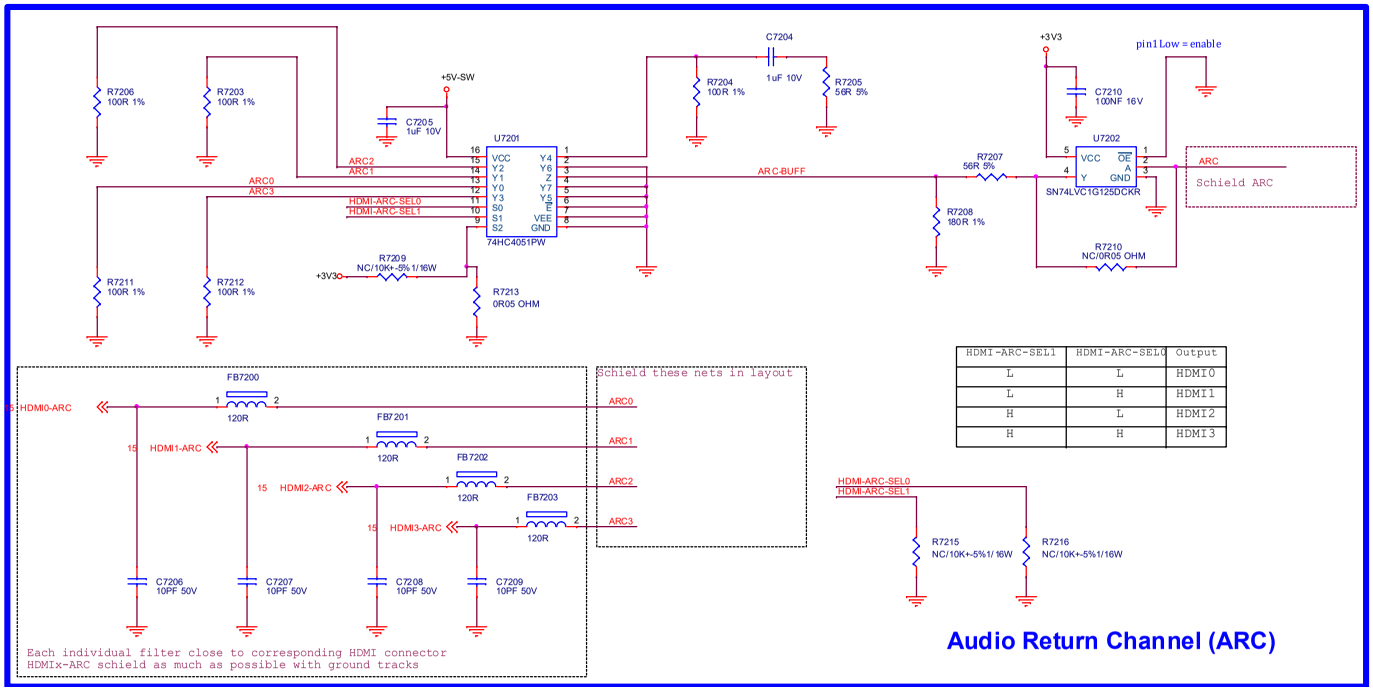

HDMI-ARC-SEL1	HDMI-ARC-SEL0	Output
L	L	HDMI0
L	H	HDMI1
H	L	HDMI2
H	H	HDMI3

9-4-16 SCART-YPbPr-CVBS

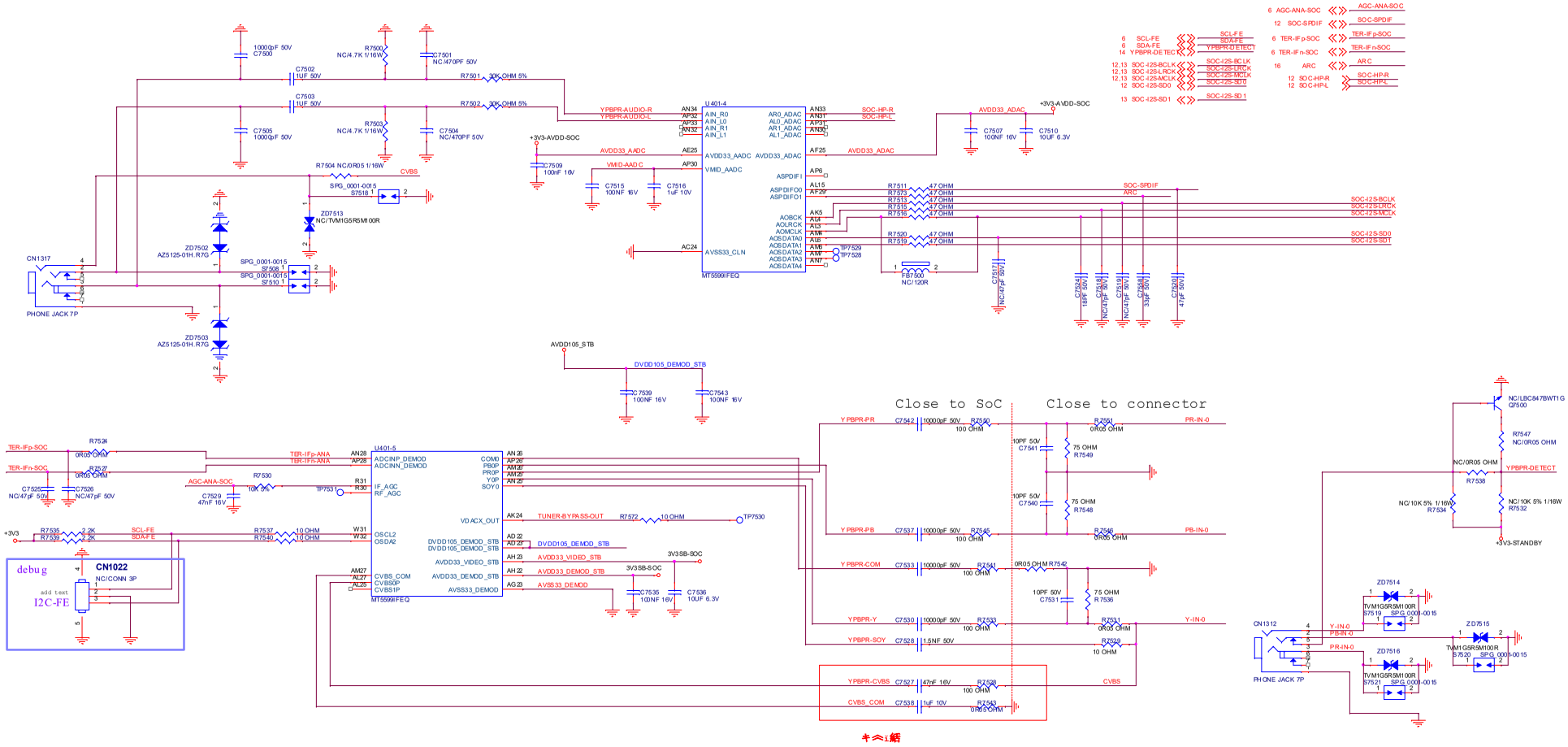

キ今ﾚ紙

9-4-17 CTRL-CONNECTORS

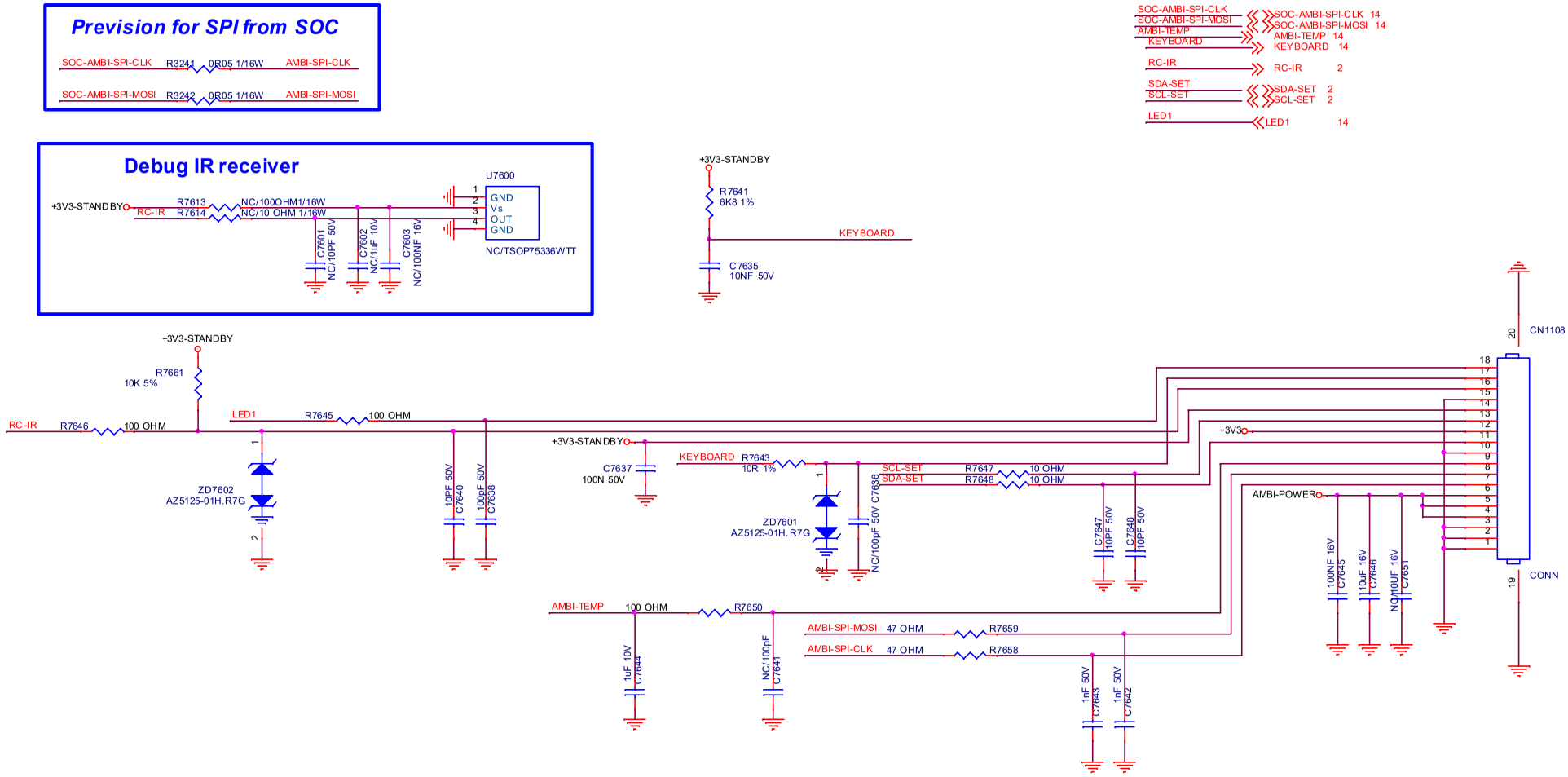

9-4-18 CTRL-ETHERNET-PHY

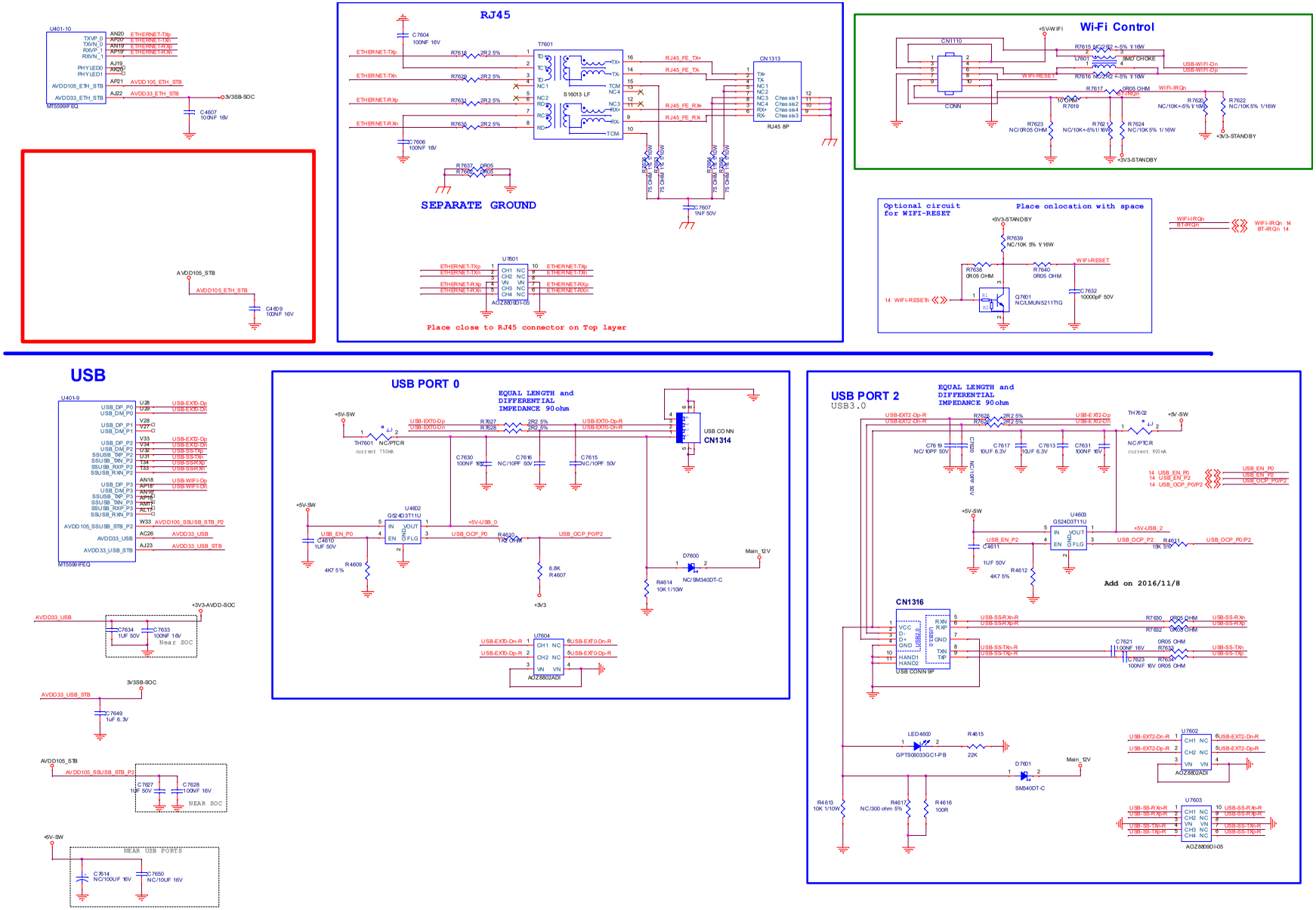

9.5 E 715GA039 IR Board

9-5-1 IR&STB LED&Light sensor

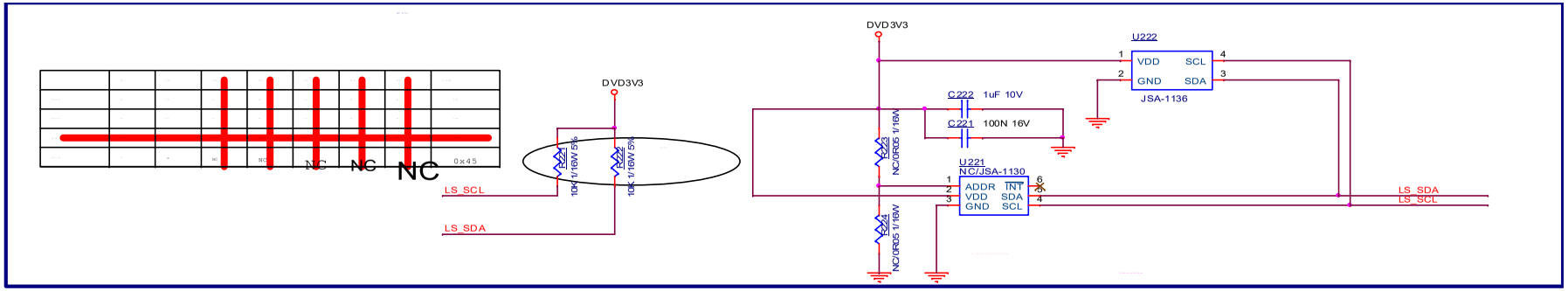

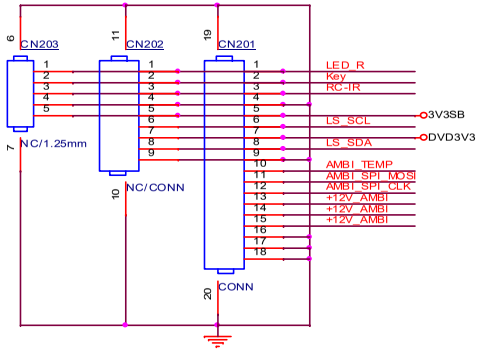

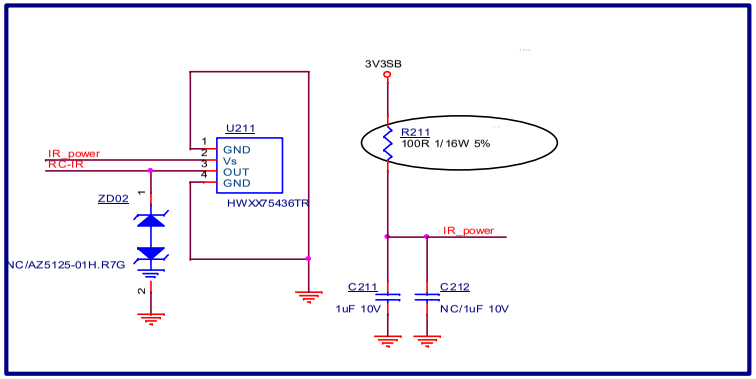

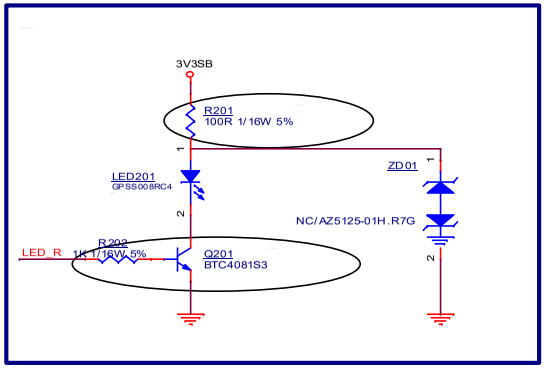

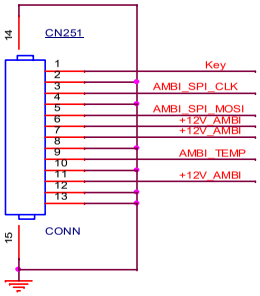

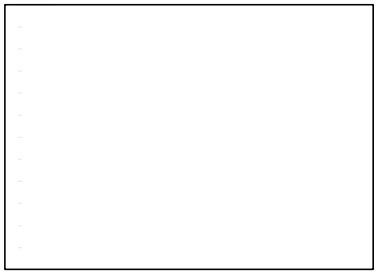

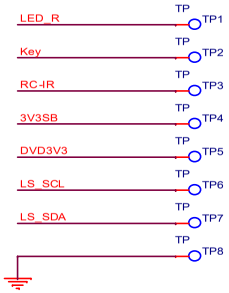

9.6 E 715GA334 Keyboard control panel

9-6-1 Key

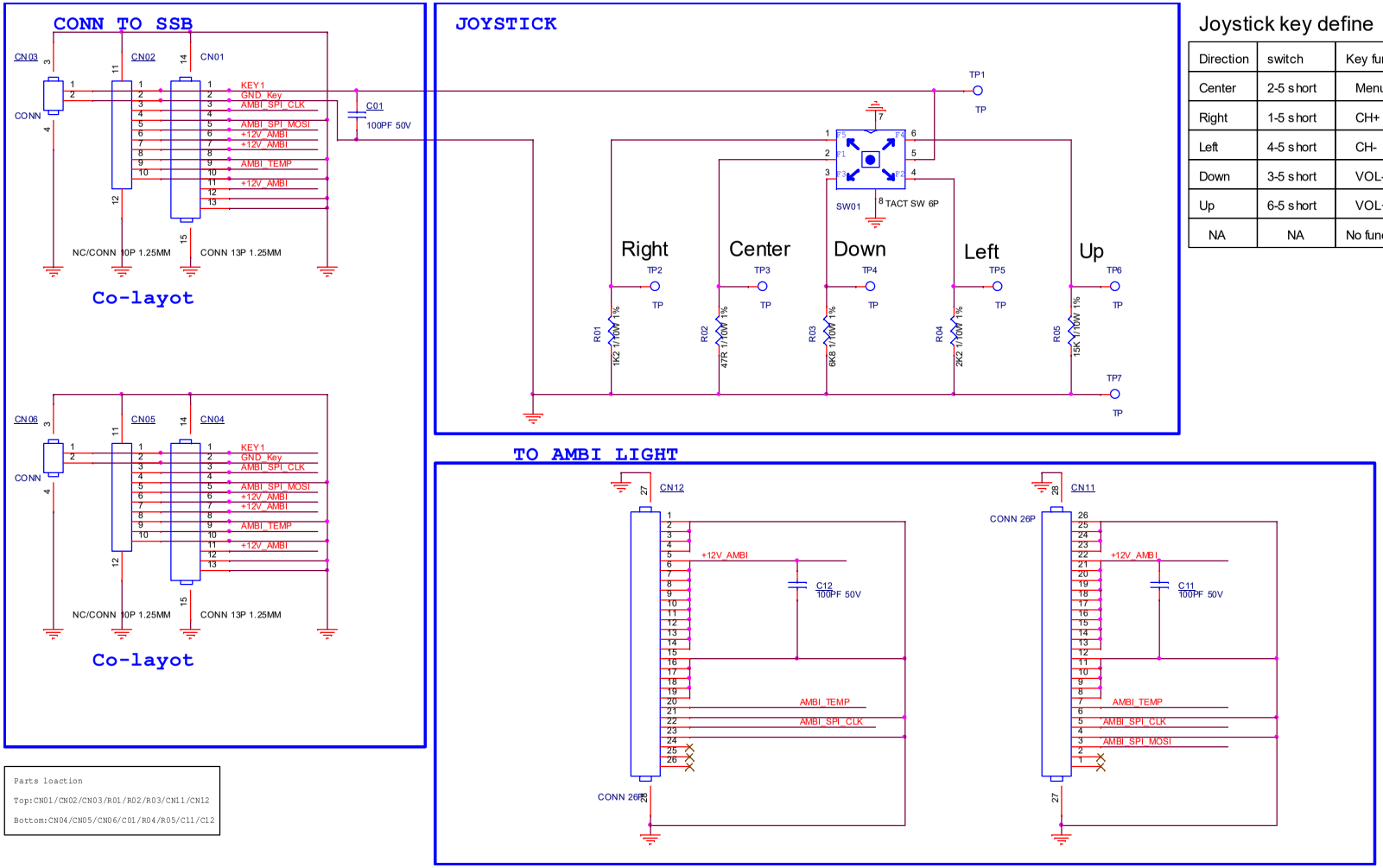

Parts loaction

Top:CN01/CN02/CN03/R01/R02/R03/CN11/CN12

Bottom:CN04/CN05/CN06/C01/R04/R05/C11/C12

Joystick key define

Direction	switch	Key functior	Resistance	Voltage	Range
Center	2-5 short	Menu	0R	0V	0.0 to 0.22 V
Right	1-5 short	CH+	1K2	0.5V	0.39 to 0.60 V
Left	4-5 short	CH-	2K2	0.81V	0.67 to 0.95 V
Down	3-5 short	VOL-	6K8	1.65V	1.41 to 1.87 V
Up	6-5 short	VOL+	15K	2.27V	1.93 to 2.58 V
NA	NA	No function	NA	3.3V	3.135 to 3.465V

Joystick circuit diagram

	pin1	pin2	pin3	pin4	pin5	pin6
F1		○			○	
F2				○	○	
F3			○		○	
F4					○	○
F5	○				○	

Joystick diversity for AL

	CN03	C07	R9	R10
AL2	N	N	N	N
AL3/AL4	Y	Y	Y	Y

9.7 B 715GB157 AMBI Panel (For 43” 85x5/9xx5 Series)

9-7-1 TLC5971

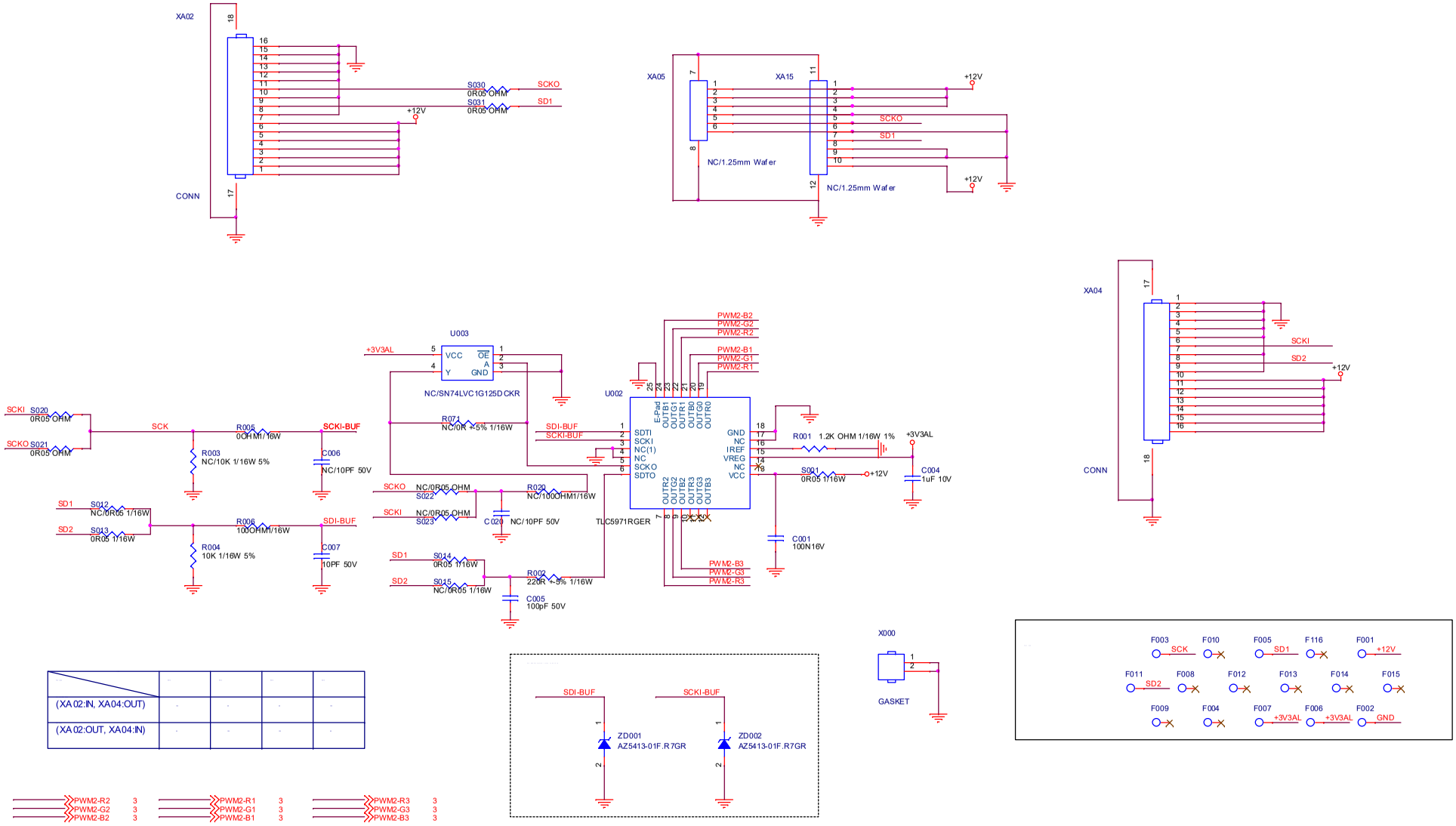

9-7-2 Ambilight 8-LED

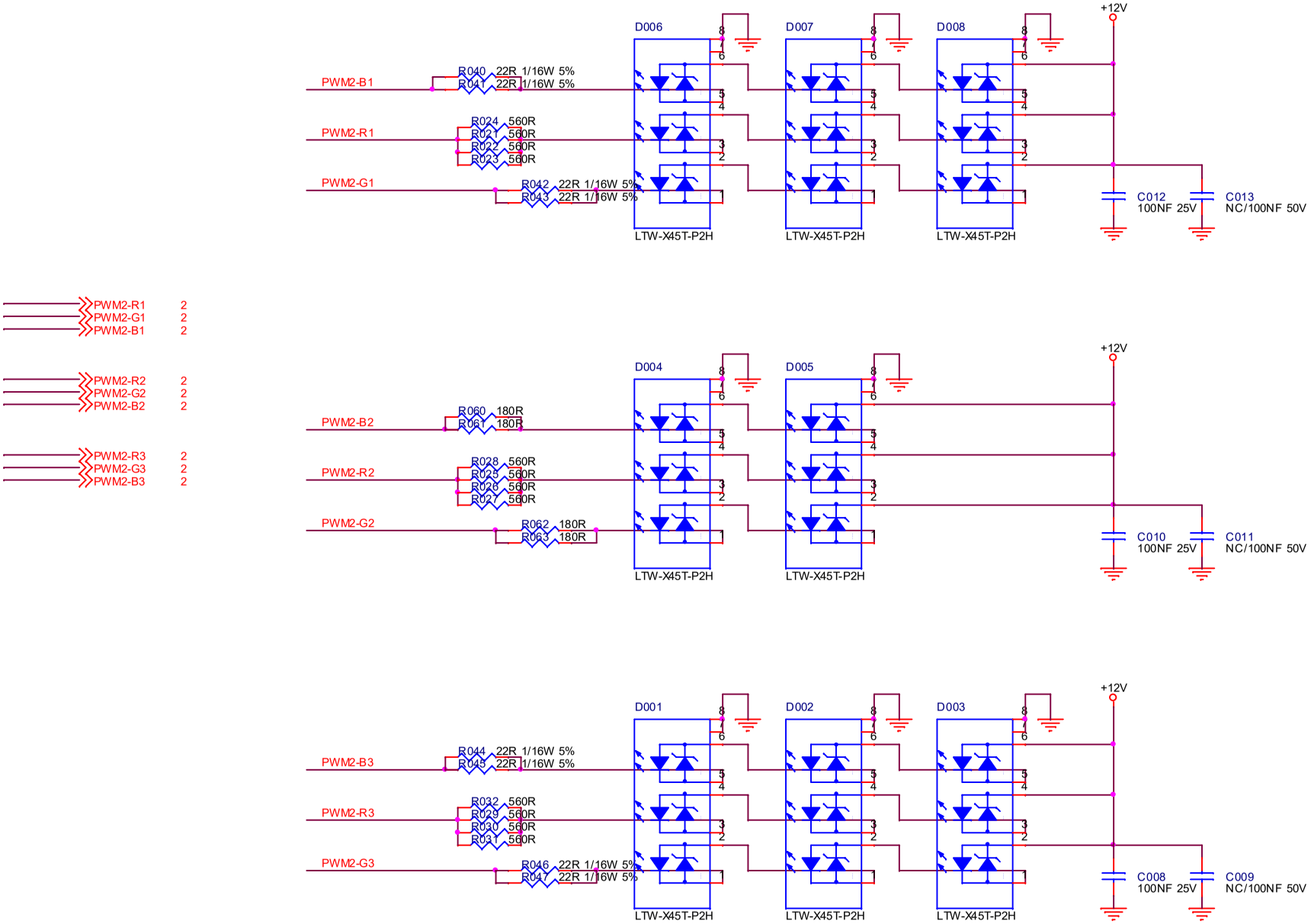

9.8 715GB158 AMBI Panel (For 43” 85x5/9xx5 Series)

9-8-1 TLC5971

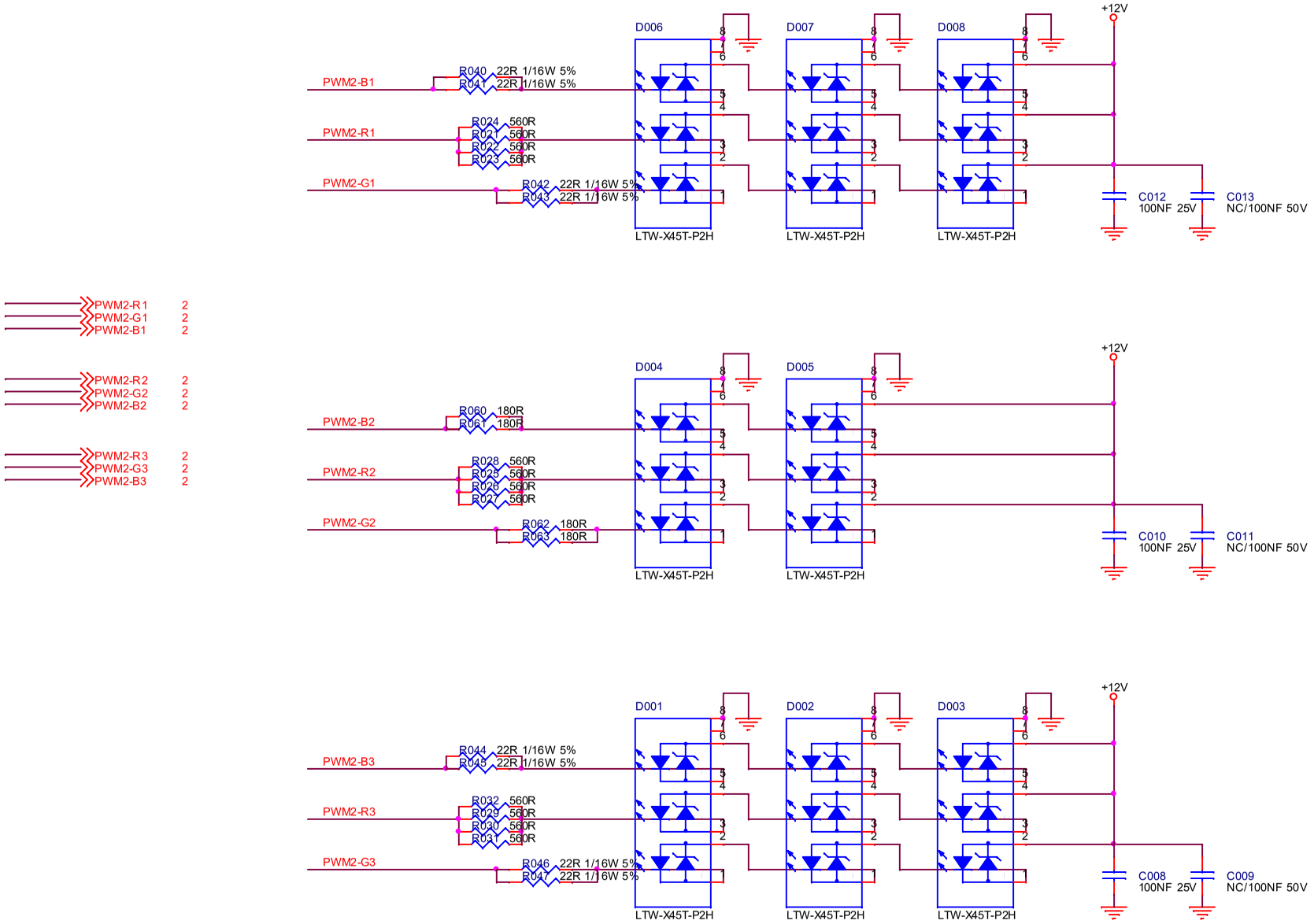

9-8-2 Ambilight 8-LED

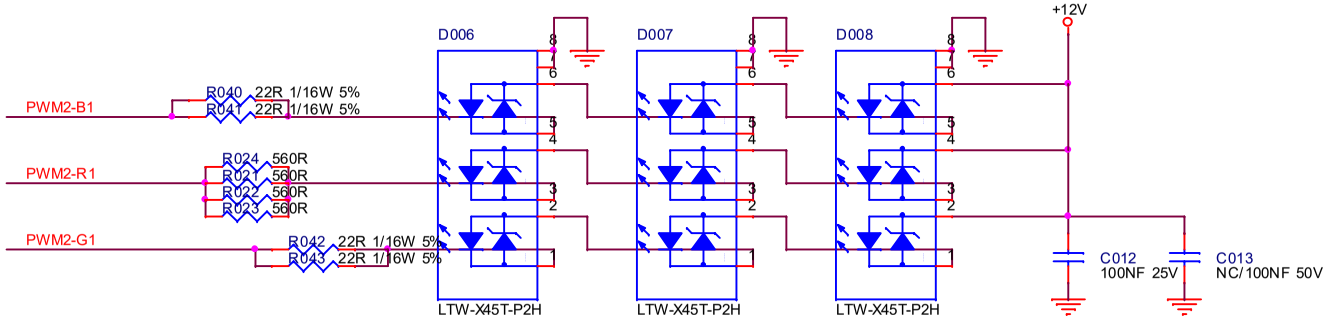

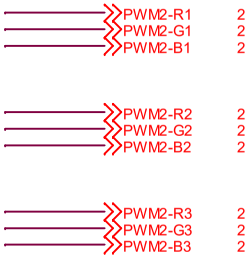

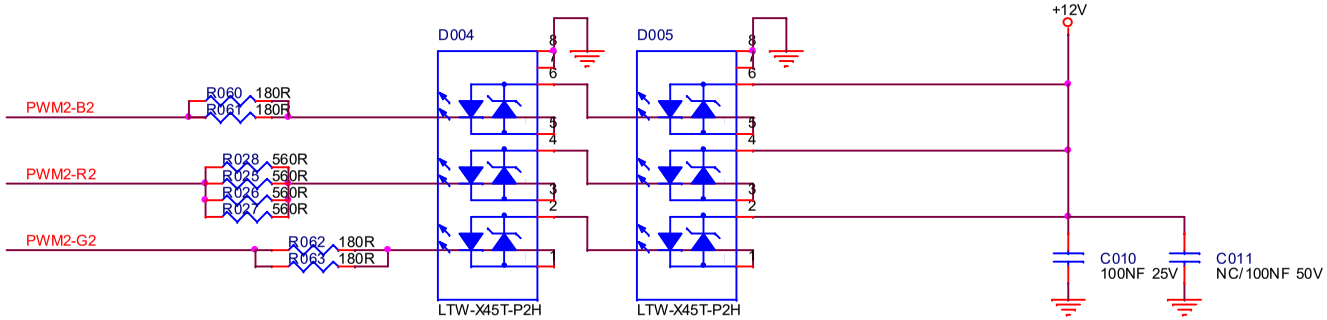

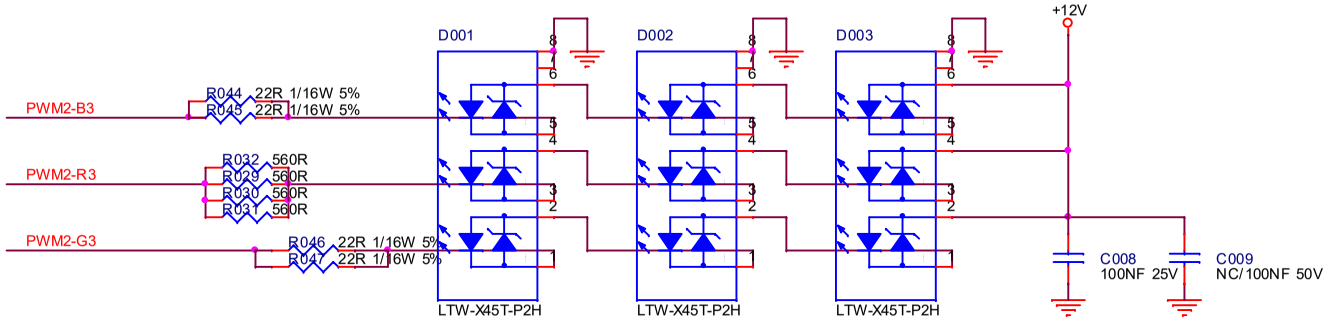

9.9 715GB174 AMBI Panel (For 50” 85x5/9xx5 & 65” 85x5/9xx5 Series)

9-9-1 TLC5971

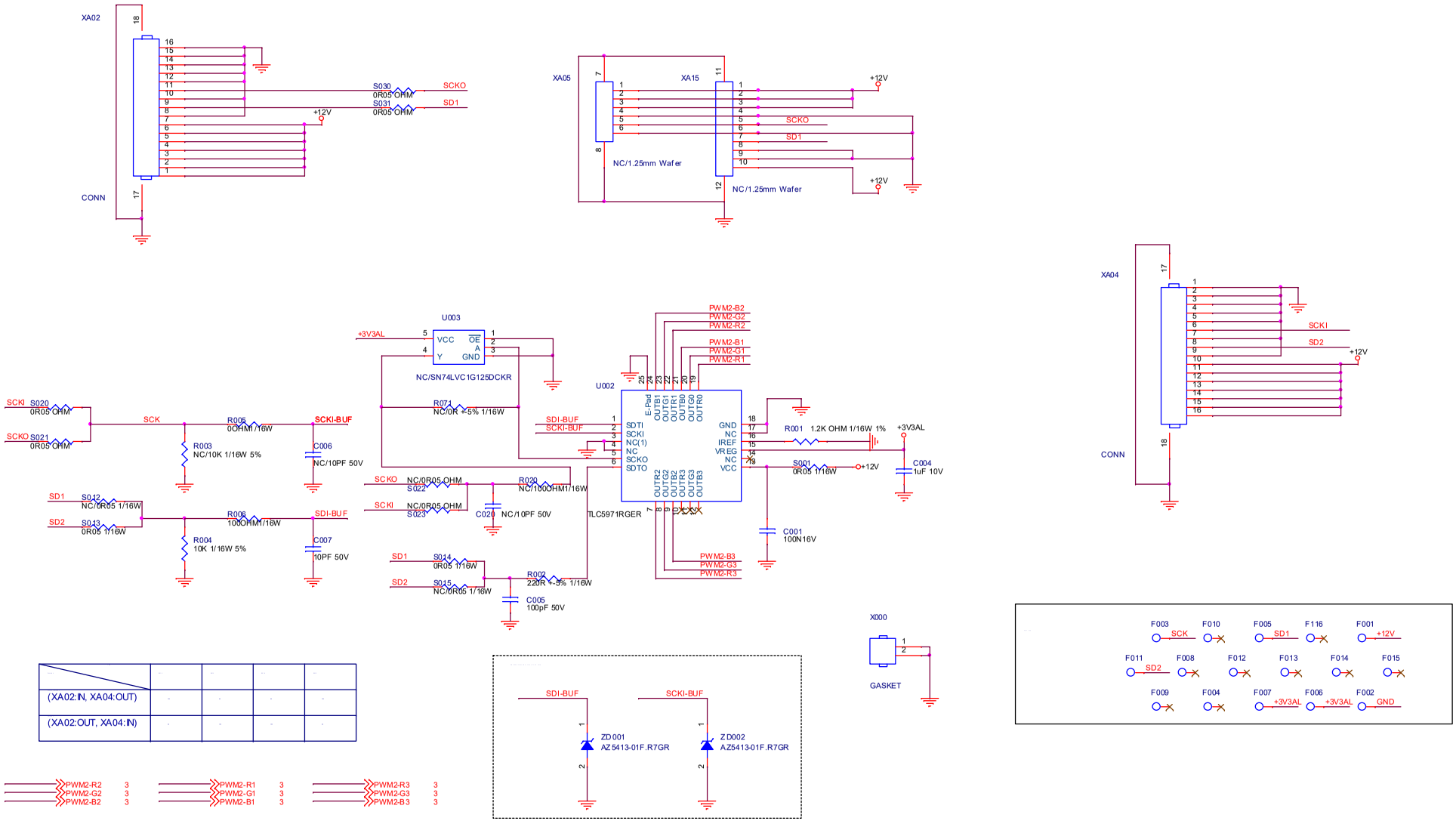

9-9-2 Ambilight 9-LED

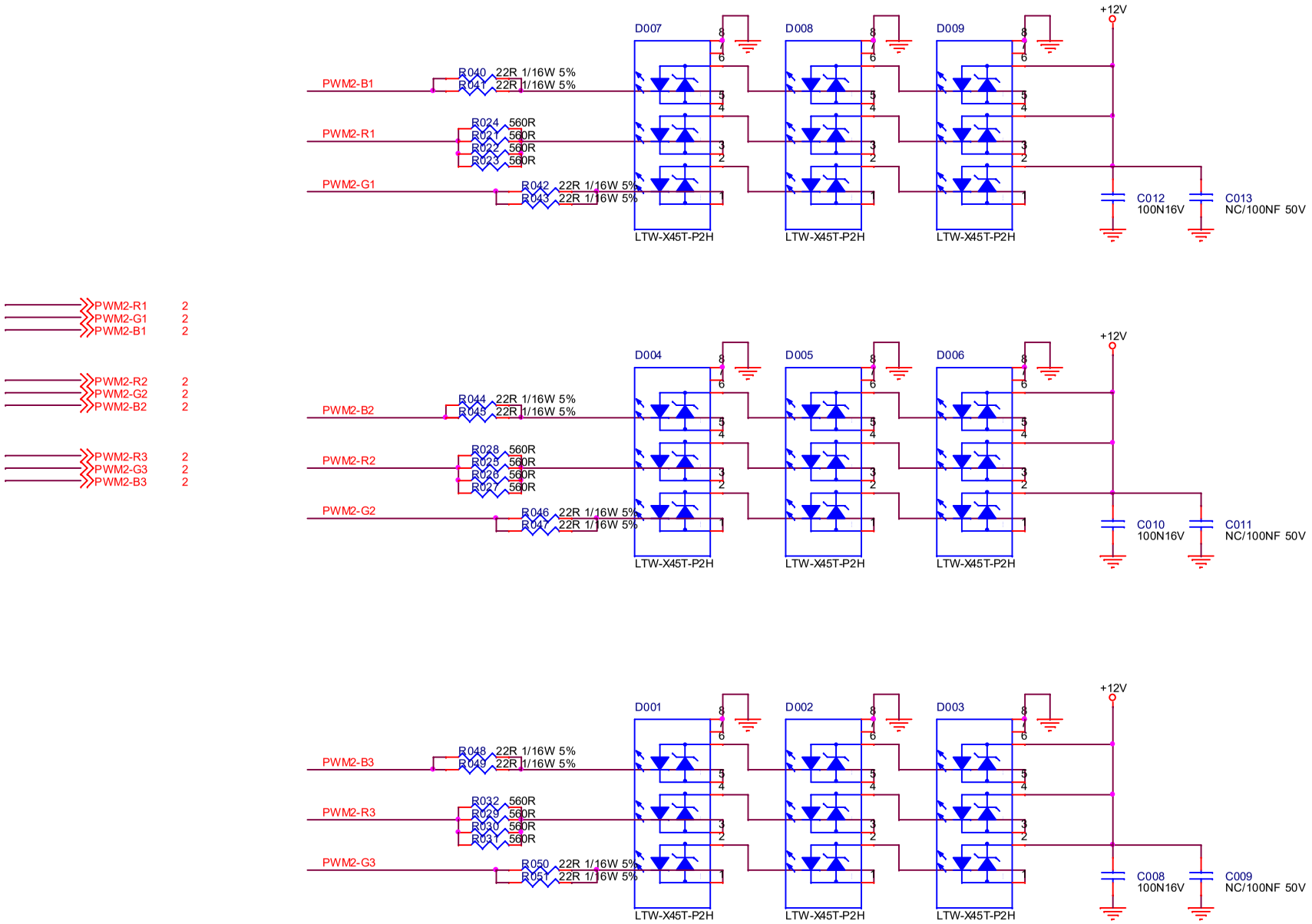

9.10 715GB175 AMBI Panel (For 50” 85x5 Series)

9-10-1 TLC5971

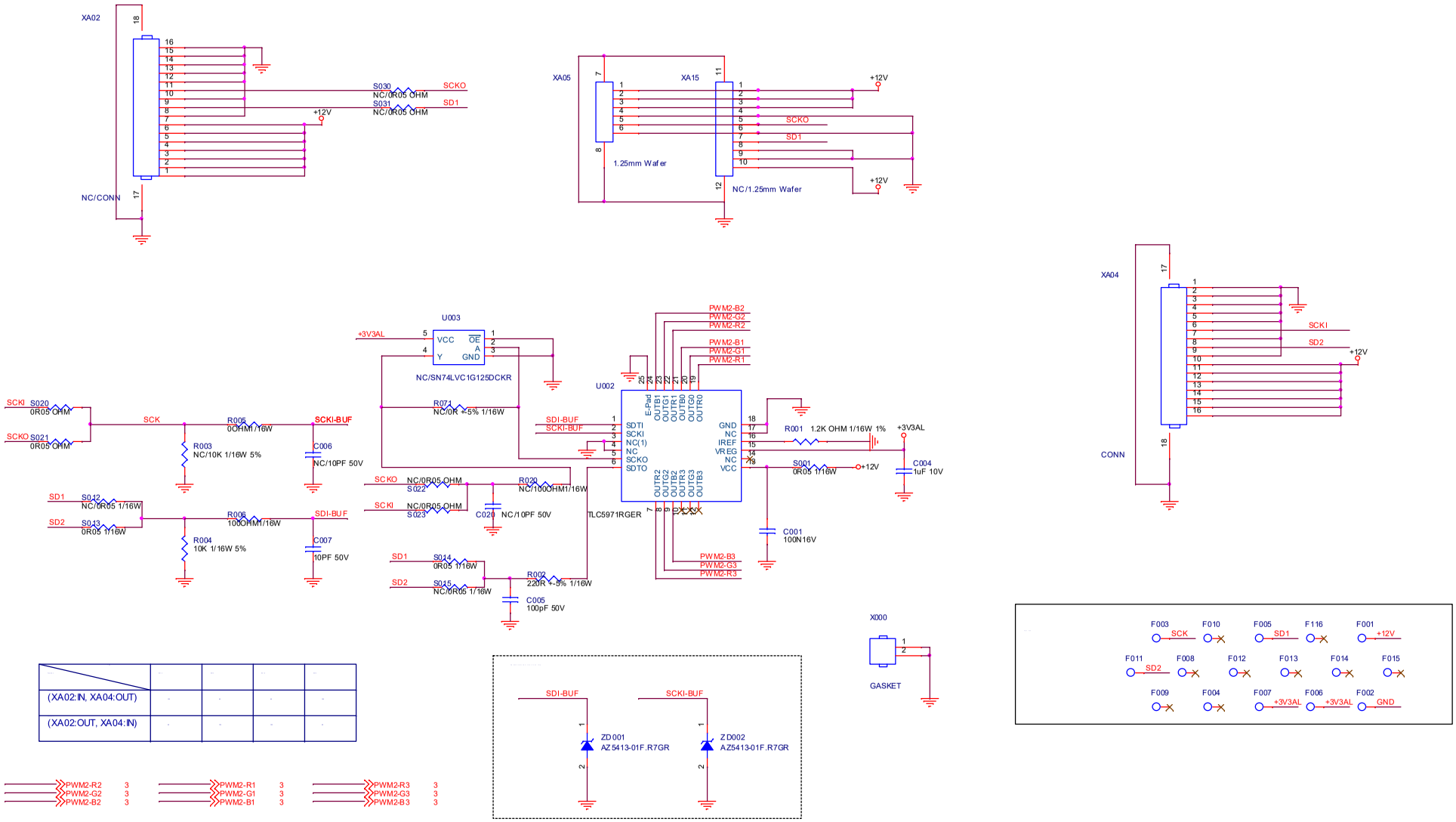

9-10-2 Ambilight 9-LED

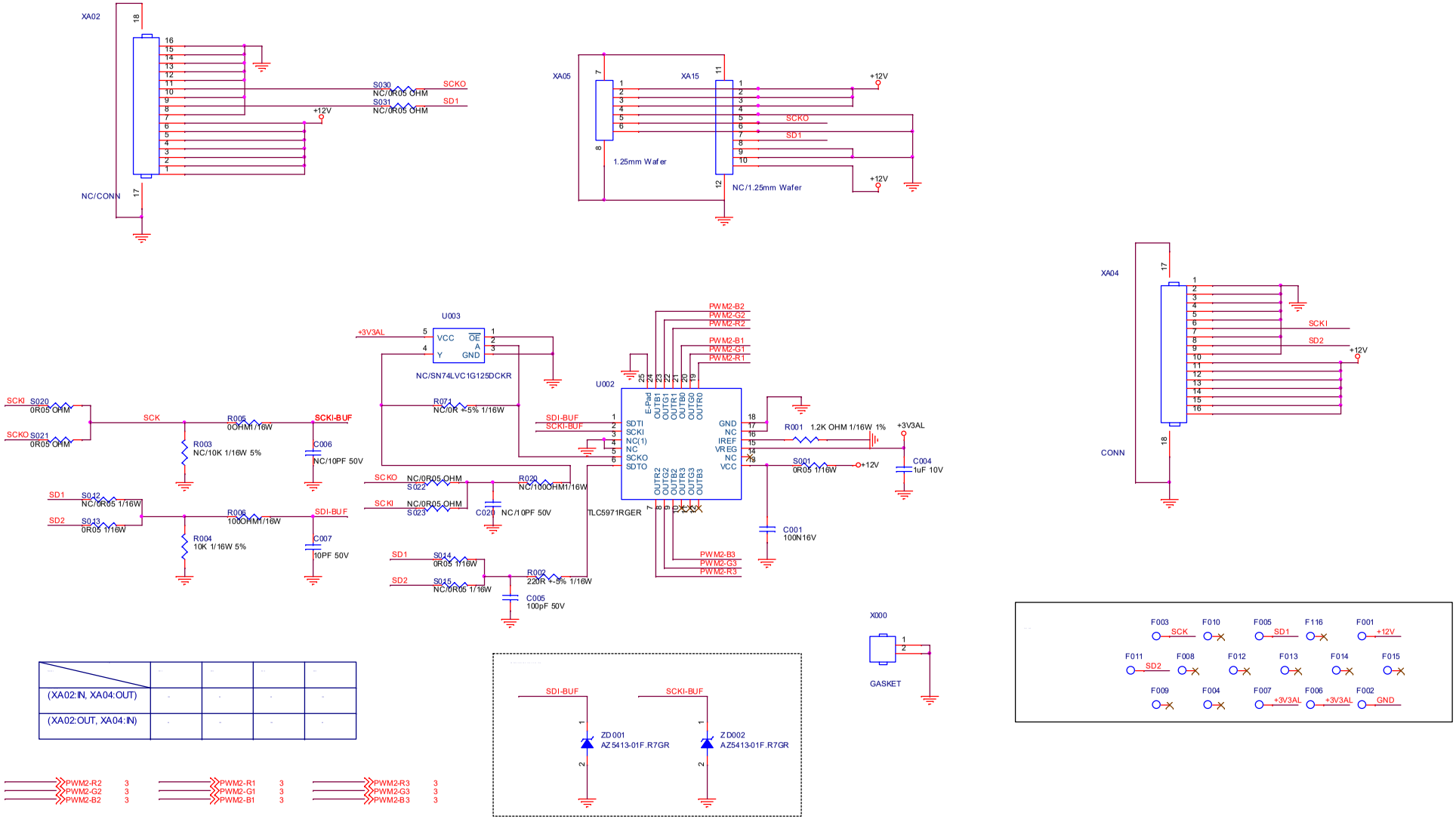

9.11 715GB194 AMBI Panel (For 50” 85x5/9xx5 & 70” 85x5/9xx5 Series)

9-11-1 TLC5971

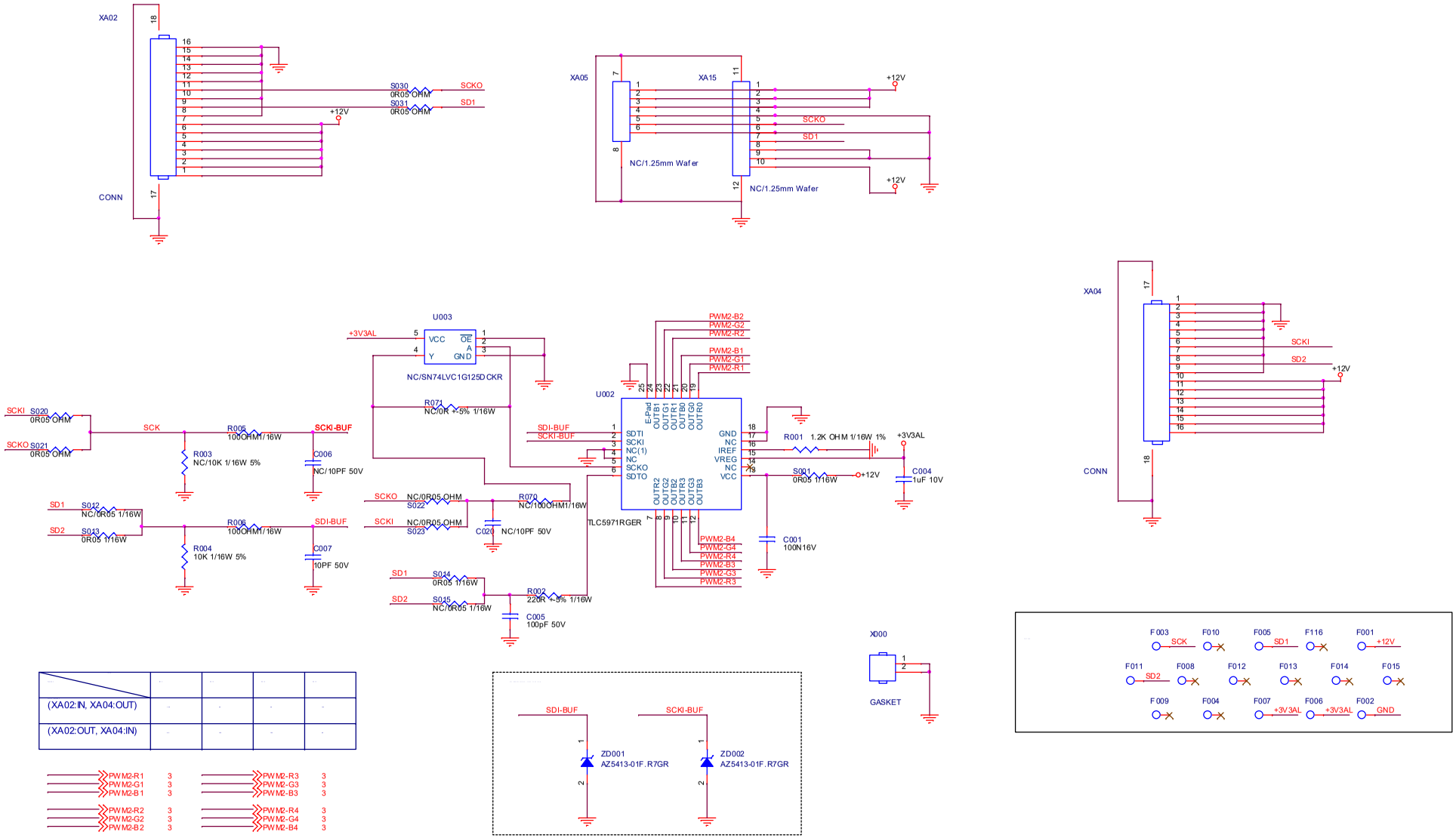

9-11-2 Ambilight 10-LED

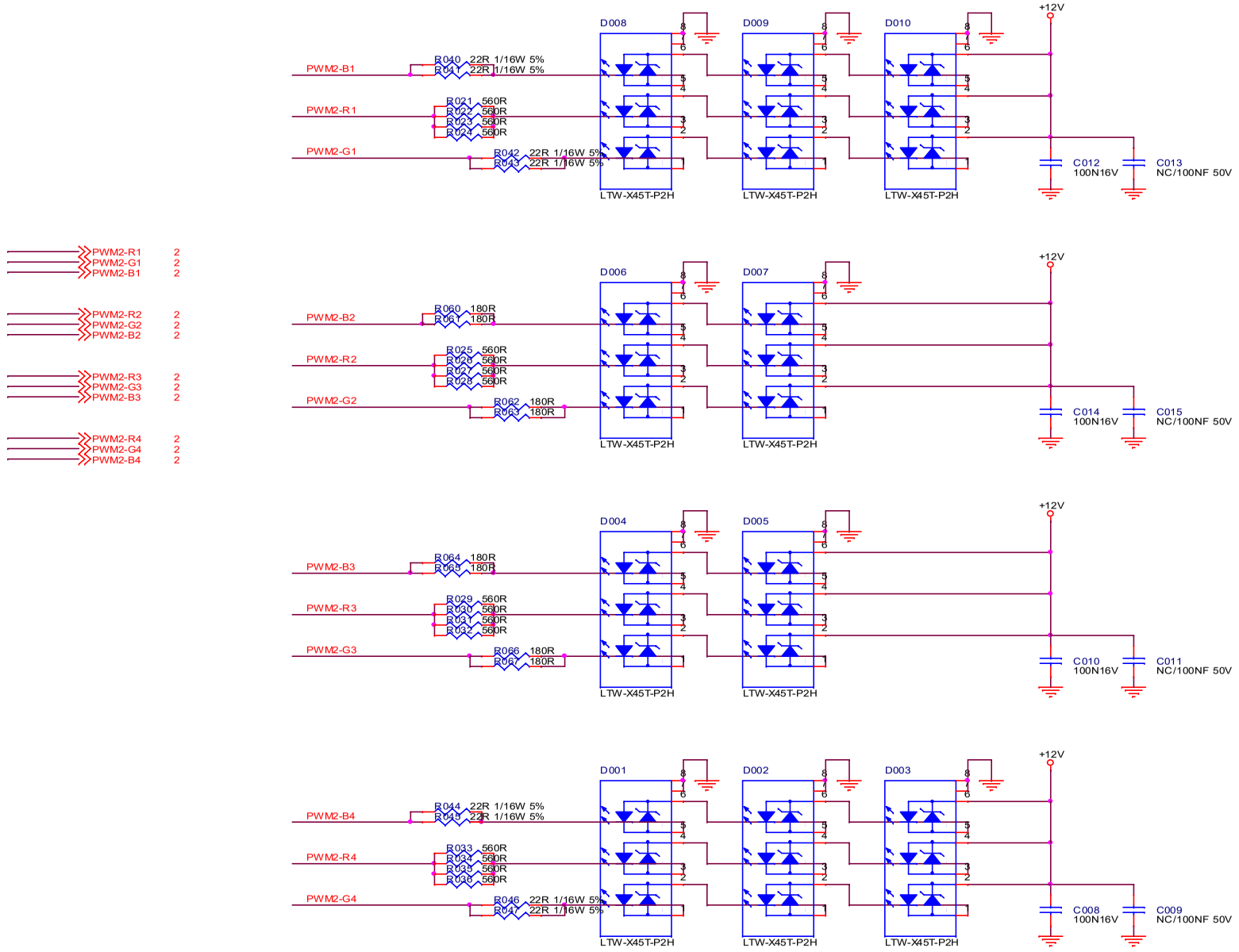

9.12 715GB195 AMBI Panel (For 55” 9435 Series)

9-12-1 TLC5971

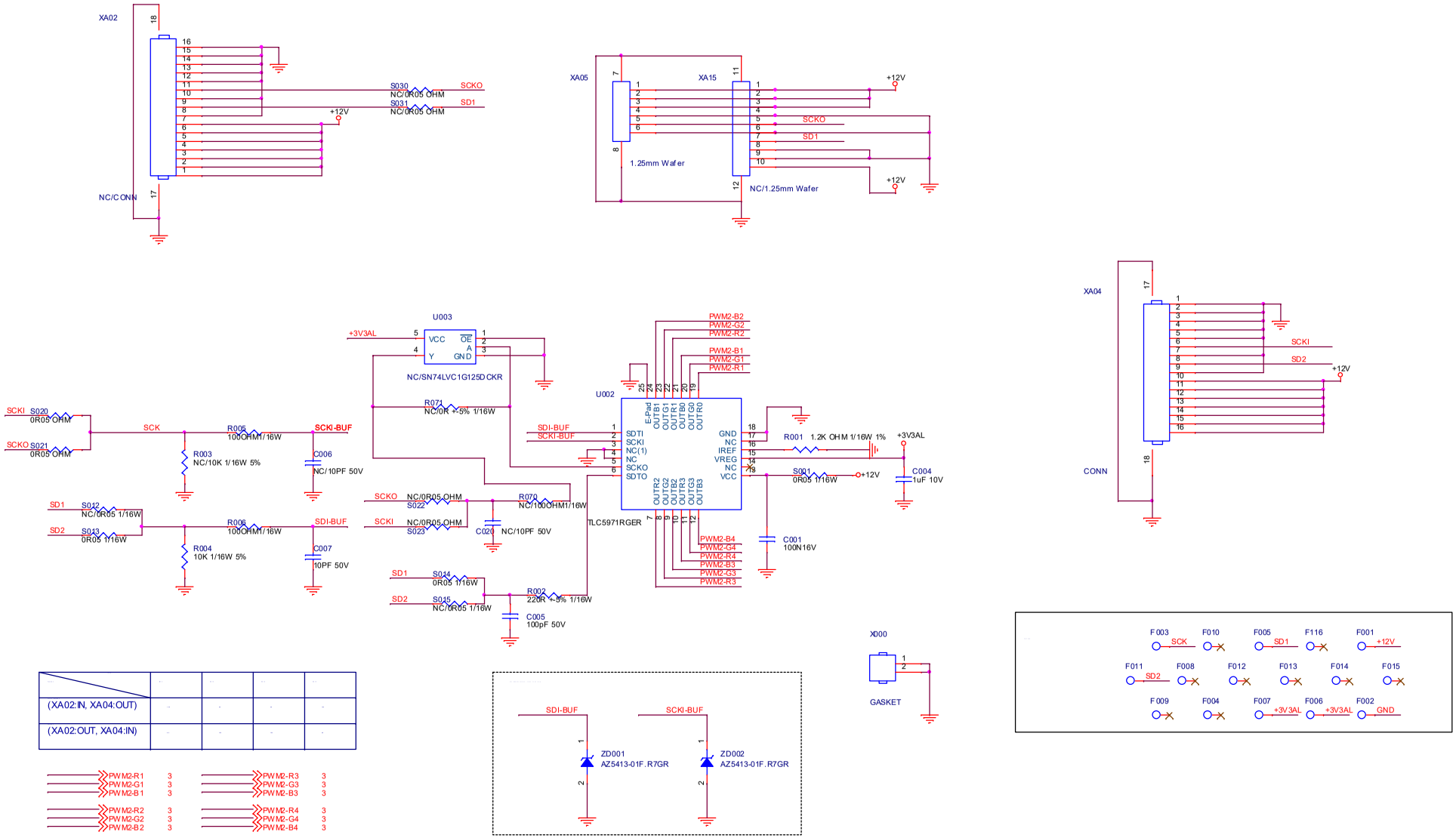

9-12-2 Ambilight 10-LED

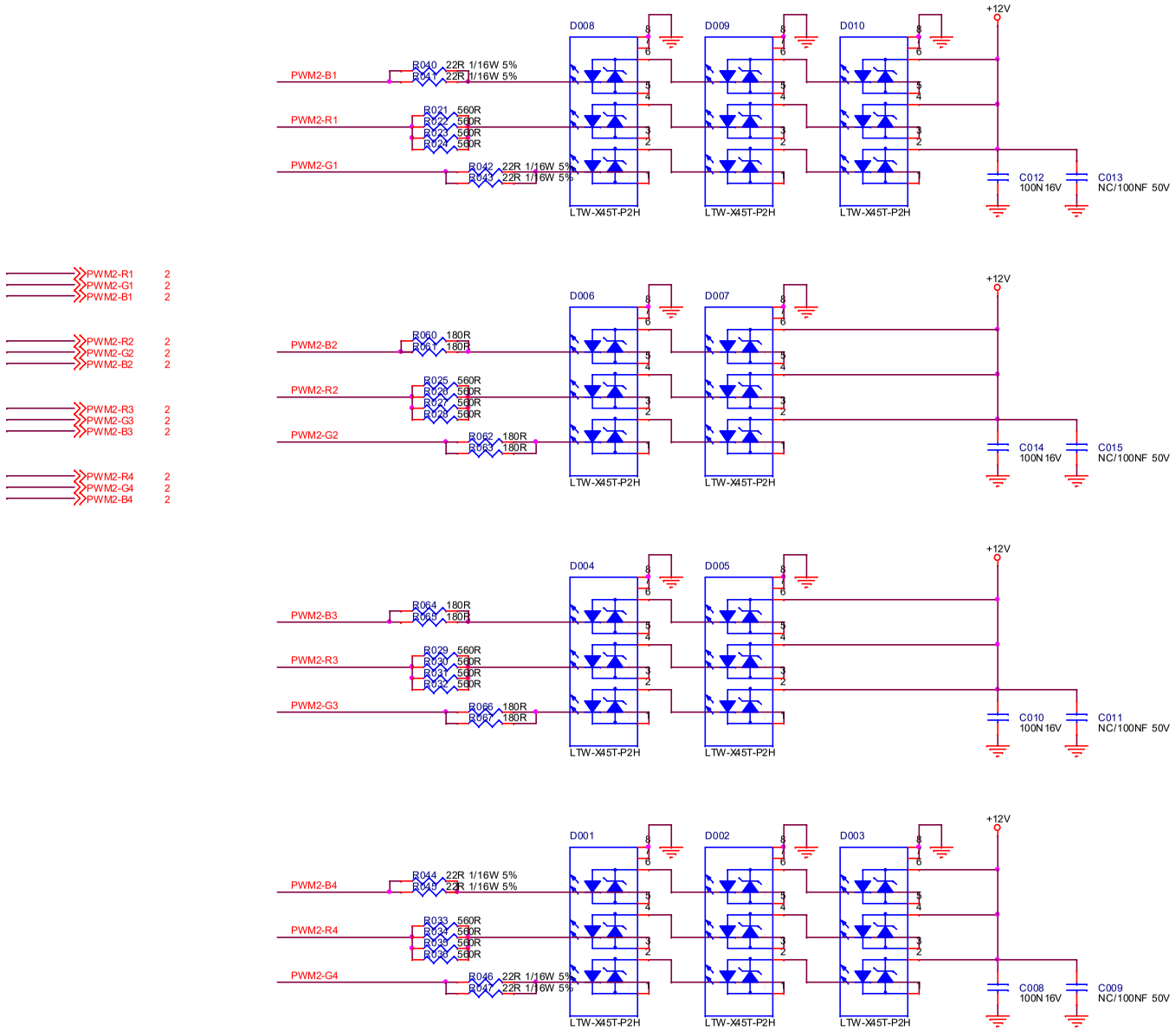

9.13 715GB205 AMBI Panel (For 55"" 9435 & 58" 85x5/9xx5 Series)

9-13-1 TLC5971

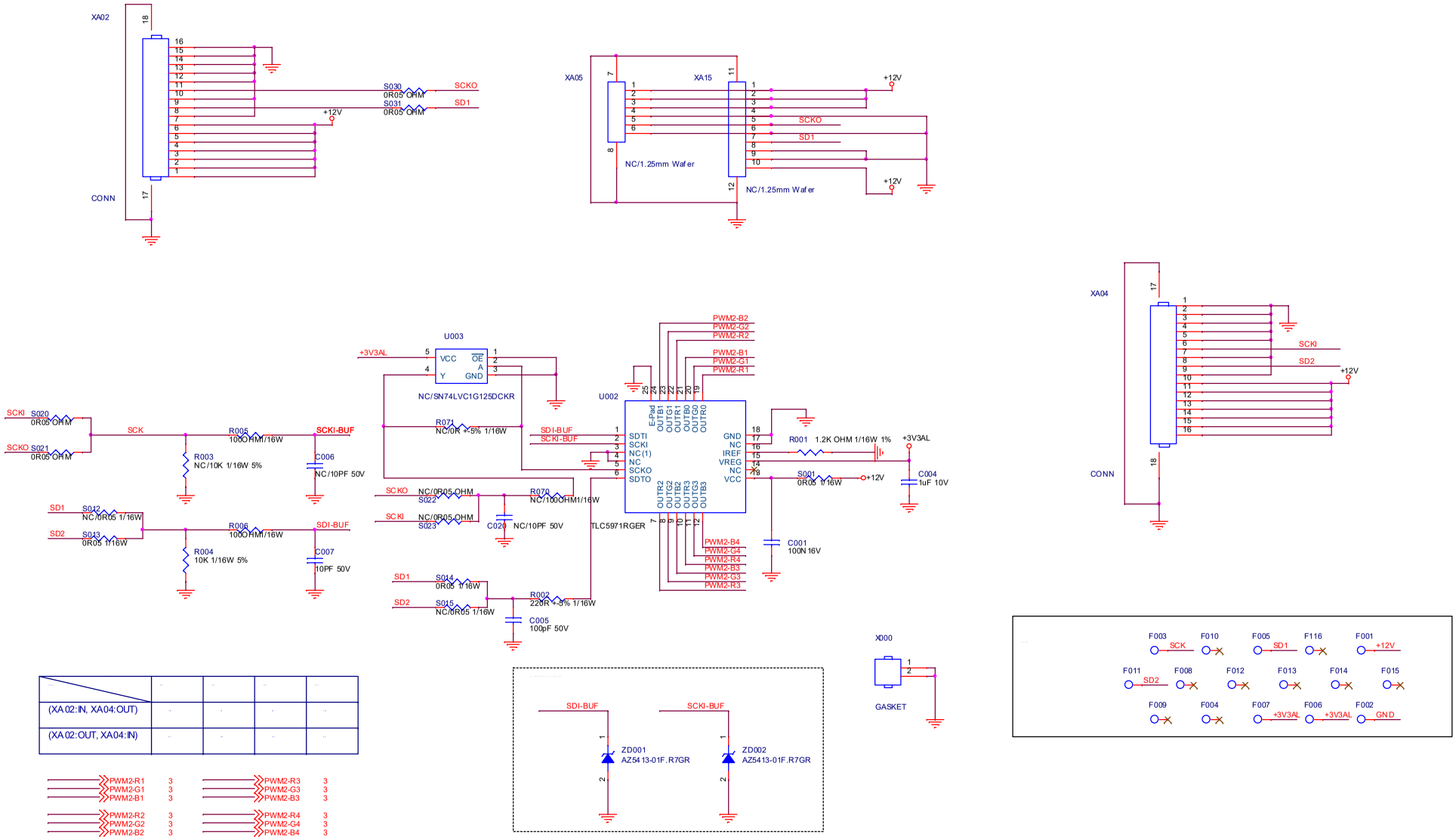

9-13-2 Ambilight 11-LED

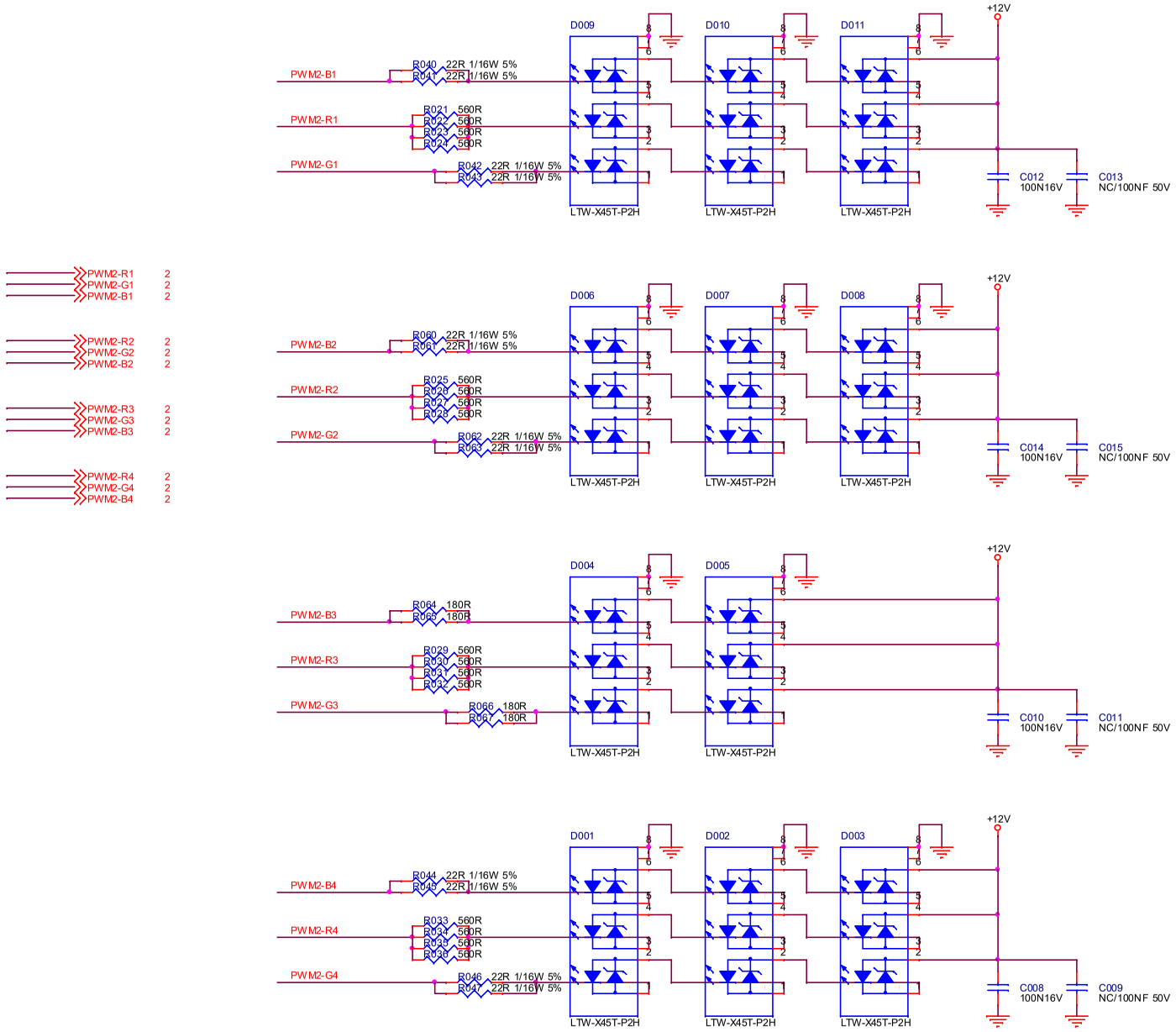

9.14 715GB206 AMBI Panel (For 55"" 9435 & 58" 85x5/9xx5 Series)

9-14-1 TLC5971

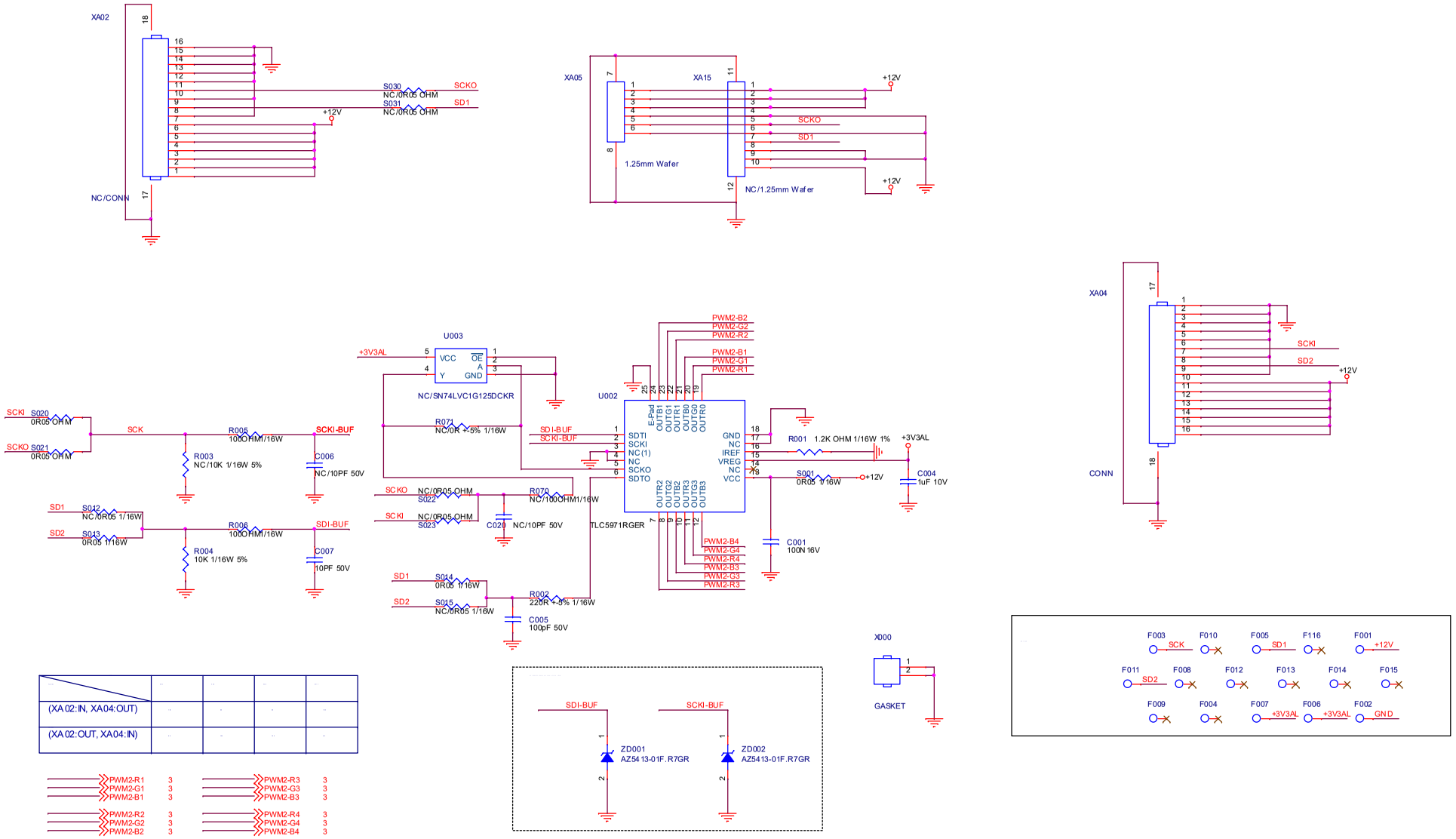

9-14-2 Ambilight 11-LED

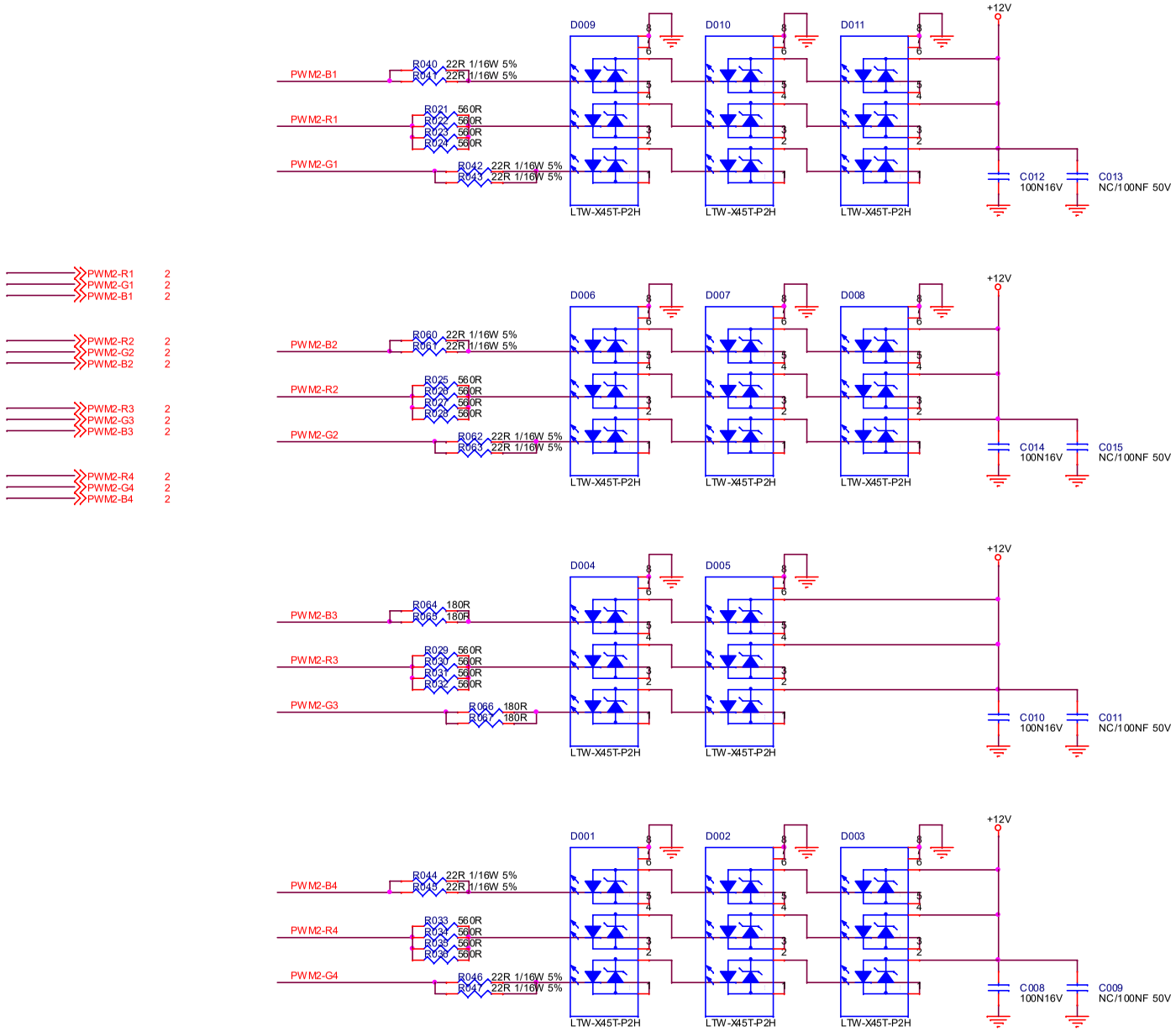

9.15 715GB086 AMBI Panel (For 50”/58” 9005 & 65”/70” 85x5/9xx5 Series)

9-15-1 TLC5971

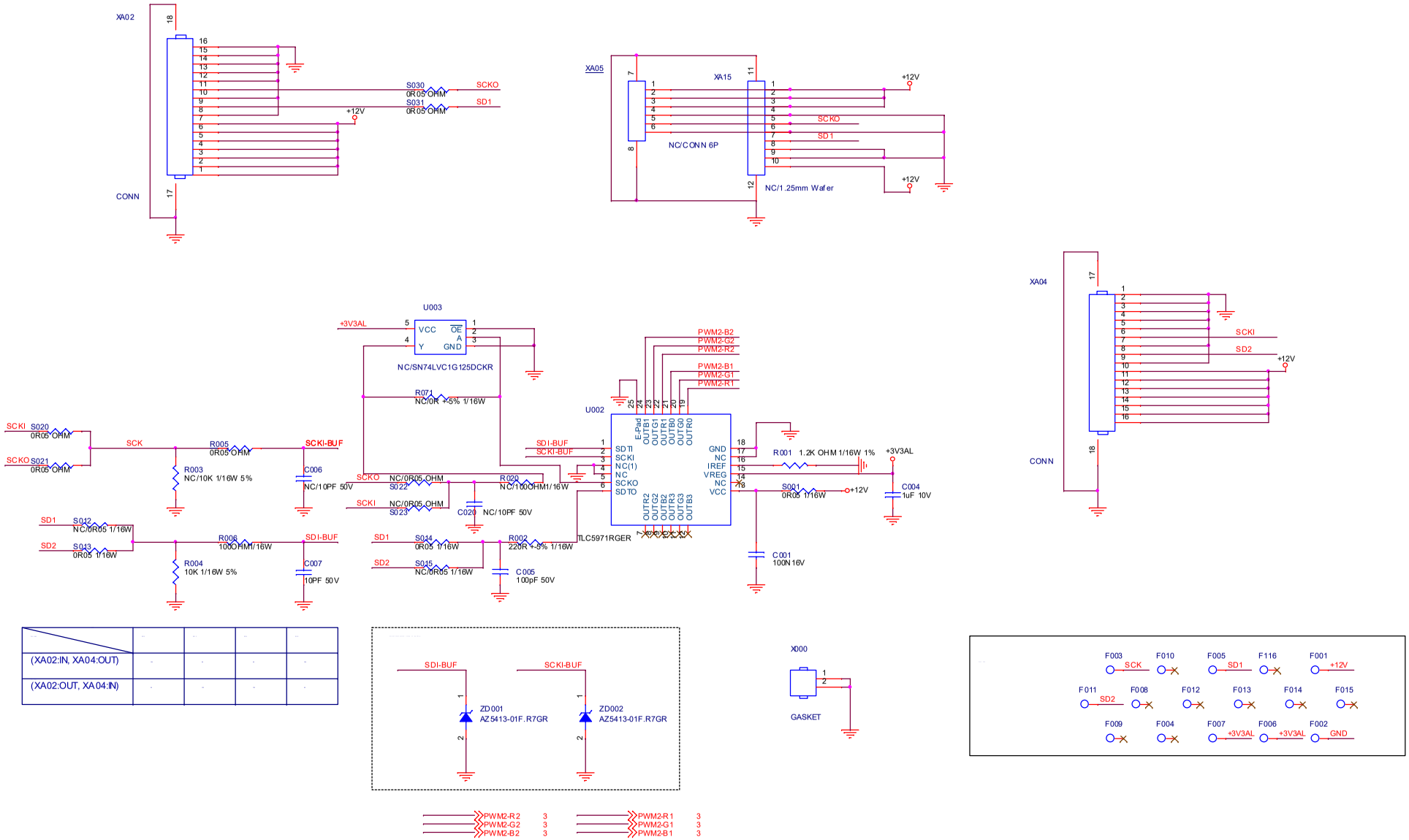

(XA02:IN, XA04:OUT)	-	-	-	-
(XA02:OUT, XA04:IN)	-	-	-	-

9-15-2 Ambilight 6-LED

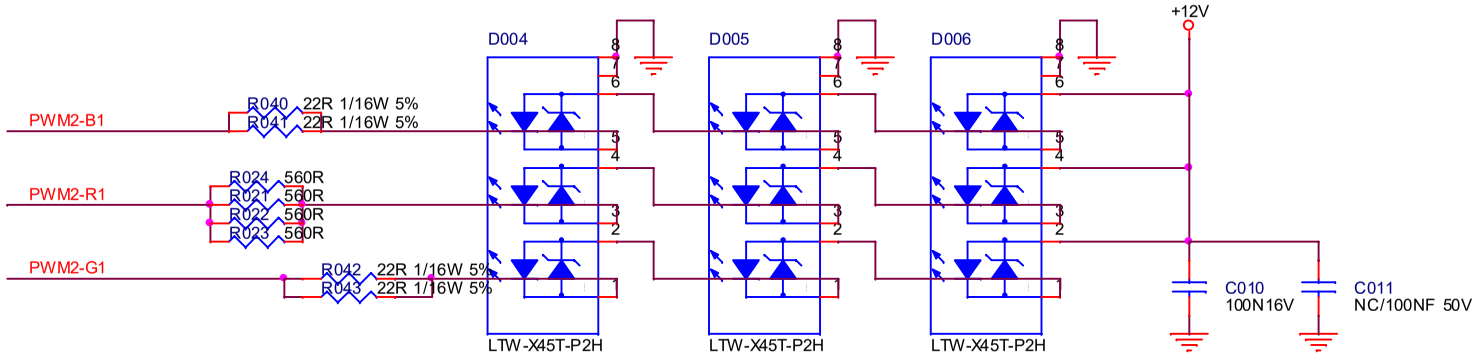

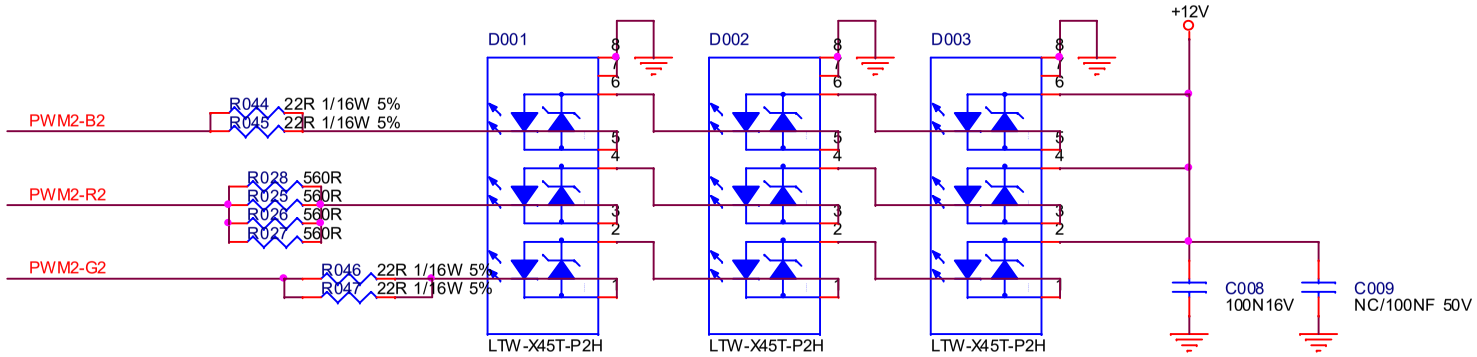

9.16 715GB087 AMBI Panel (For 65”/70” 85x5 & 65” 9435 Series)

9-16-1 TLC5971

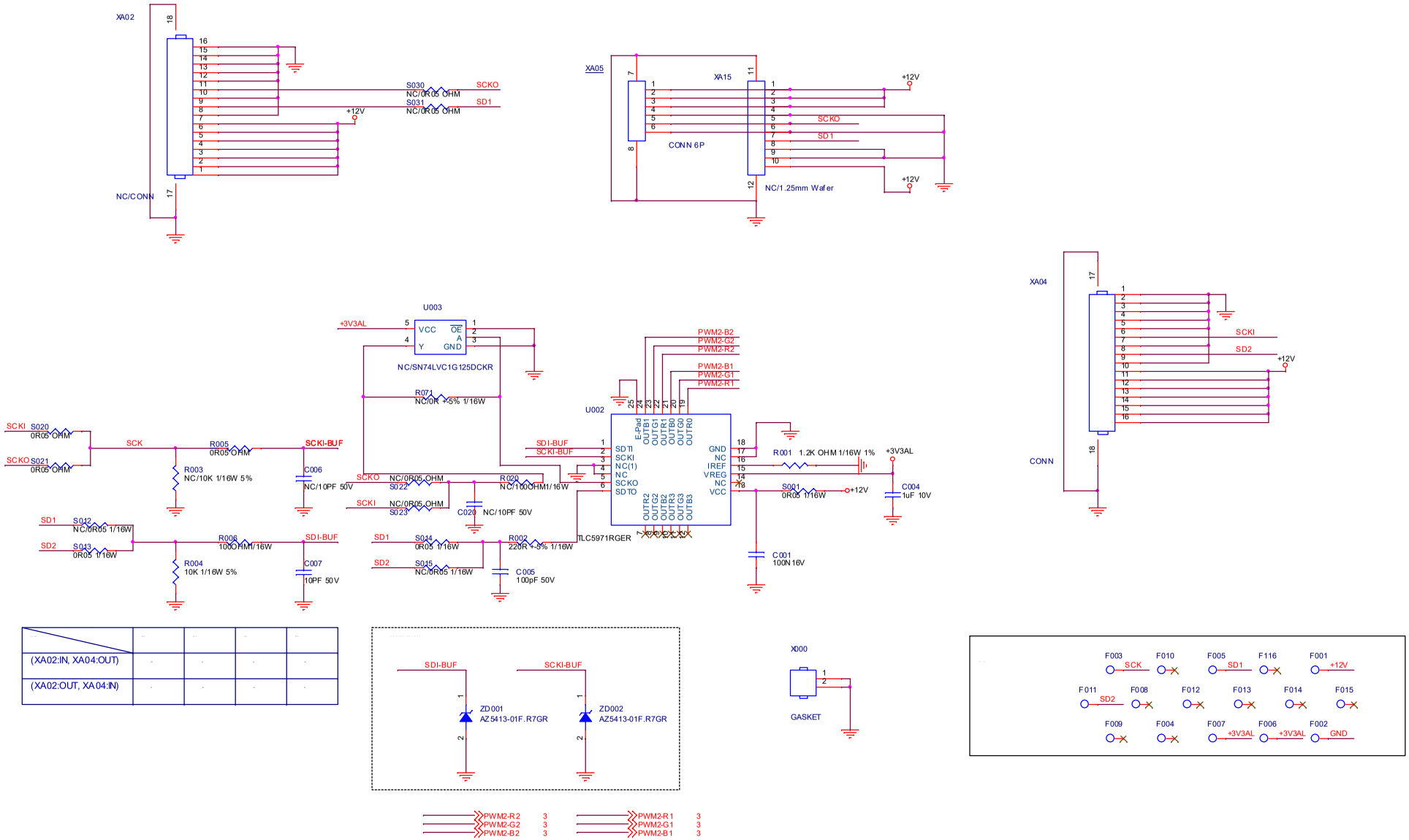

(XA02:IN, XA04:OUT)	-	-	-	-
(XA02:OUT, XA04:IN)	-	-	-	-

9-16-2 Ambilight 6-LED

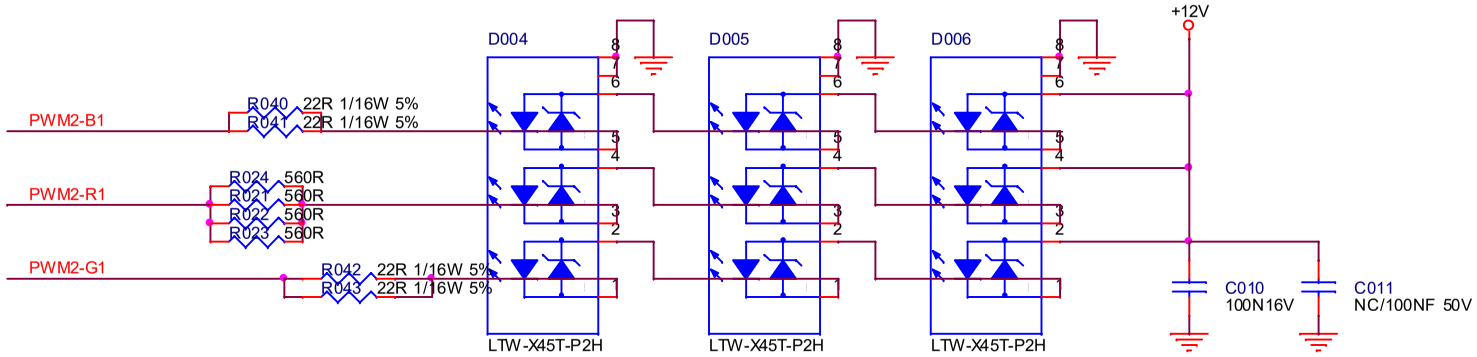

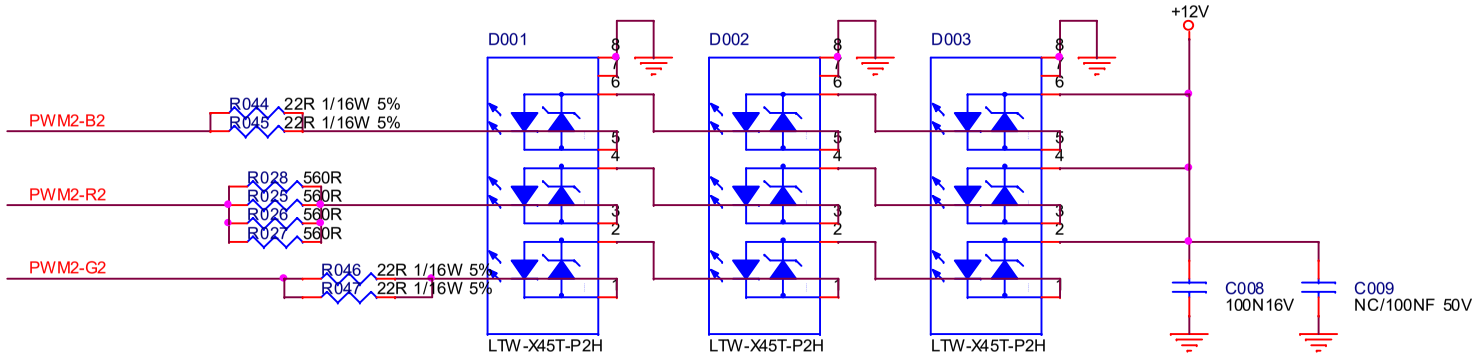

9.17 A 715B129 AMBI Panel (For 65”/70” 85x5 & 65” 9435 & 65” 9005 Series)

9-17-1 TLC5971

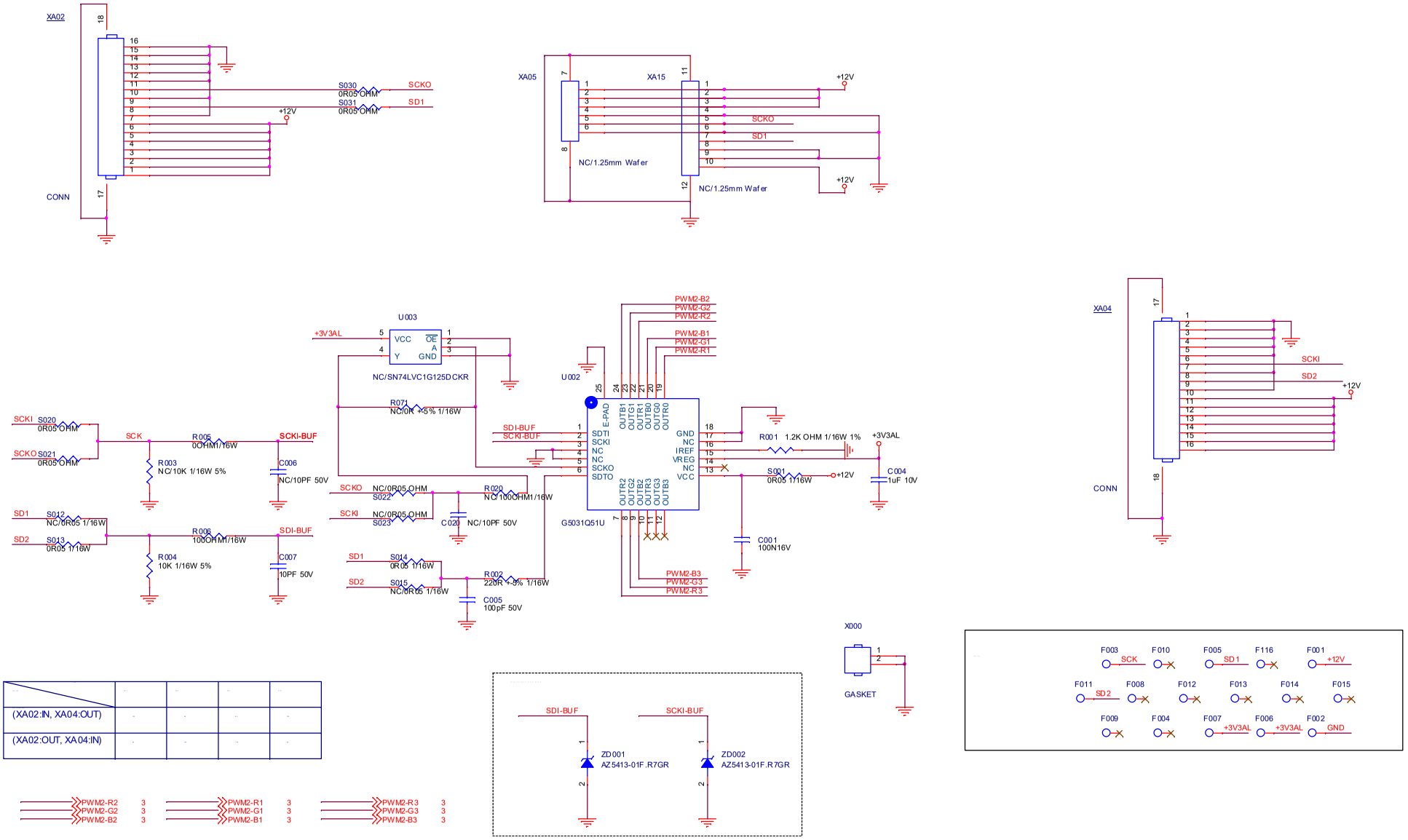

(XA02:IN, XA04:OUT)	-	-	-	-
(XA02:OUT, XA04:IN)	-	-	-	-

9-17-2 Ambilight 7-LED

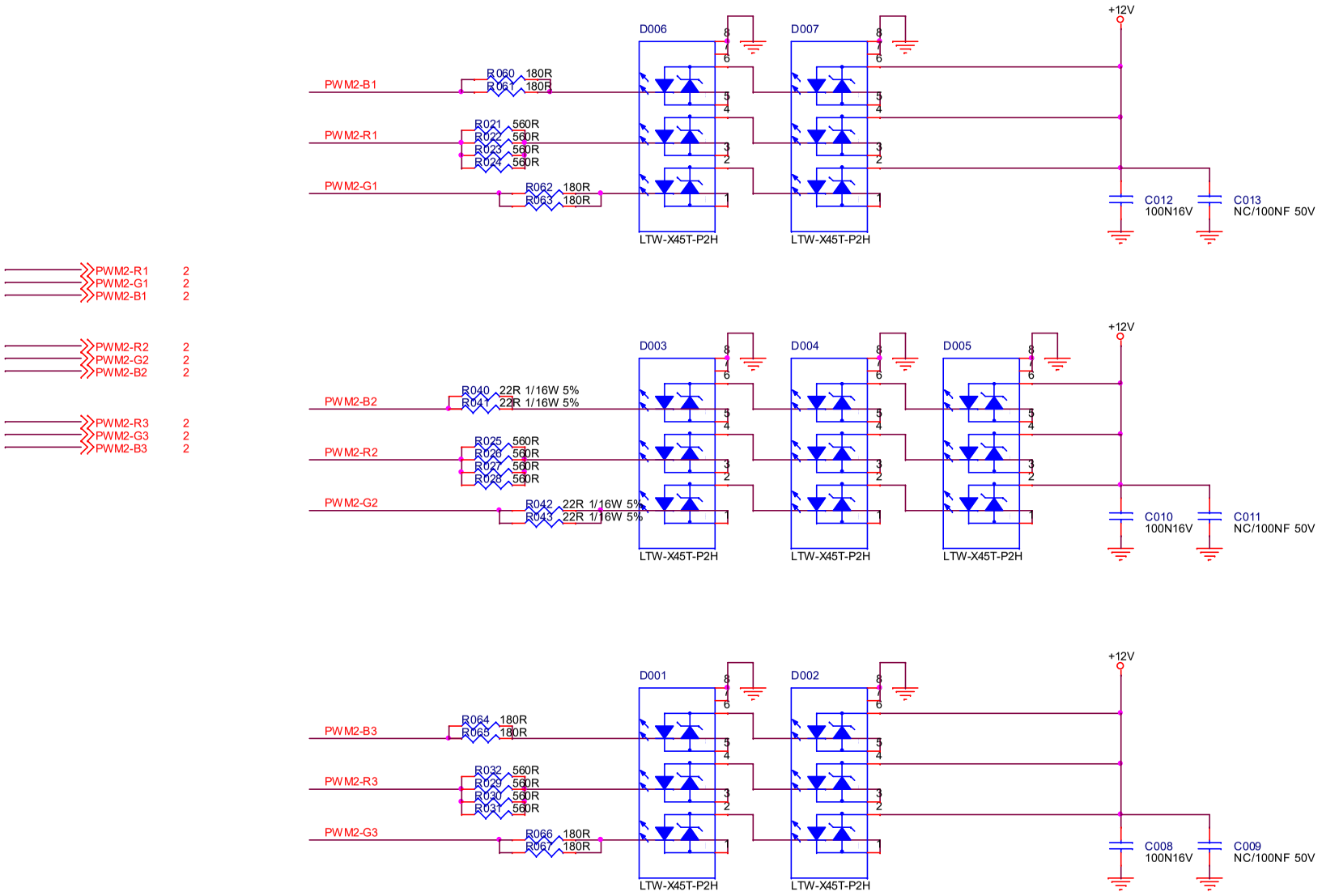

9.18 A 715GA823 Audio board (For 55”/65” 9435 Series)

9-18-1 sound board

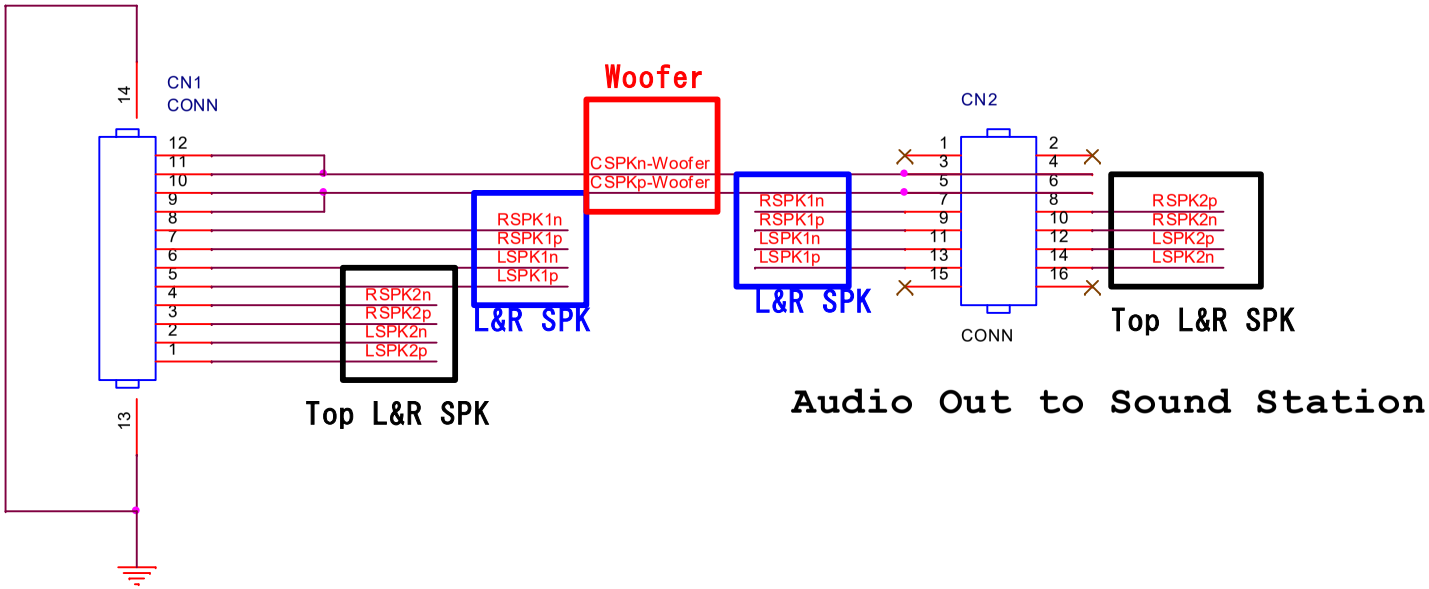

Audio IN from SSB

10. Styling Sheets

10.1 85x5 series 43"

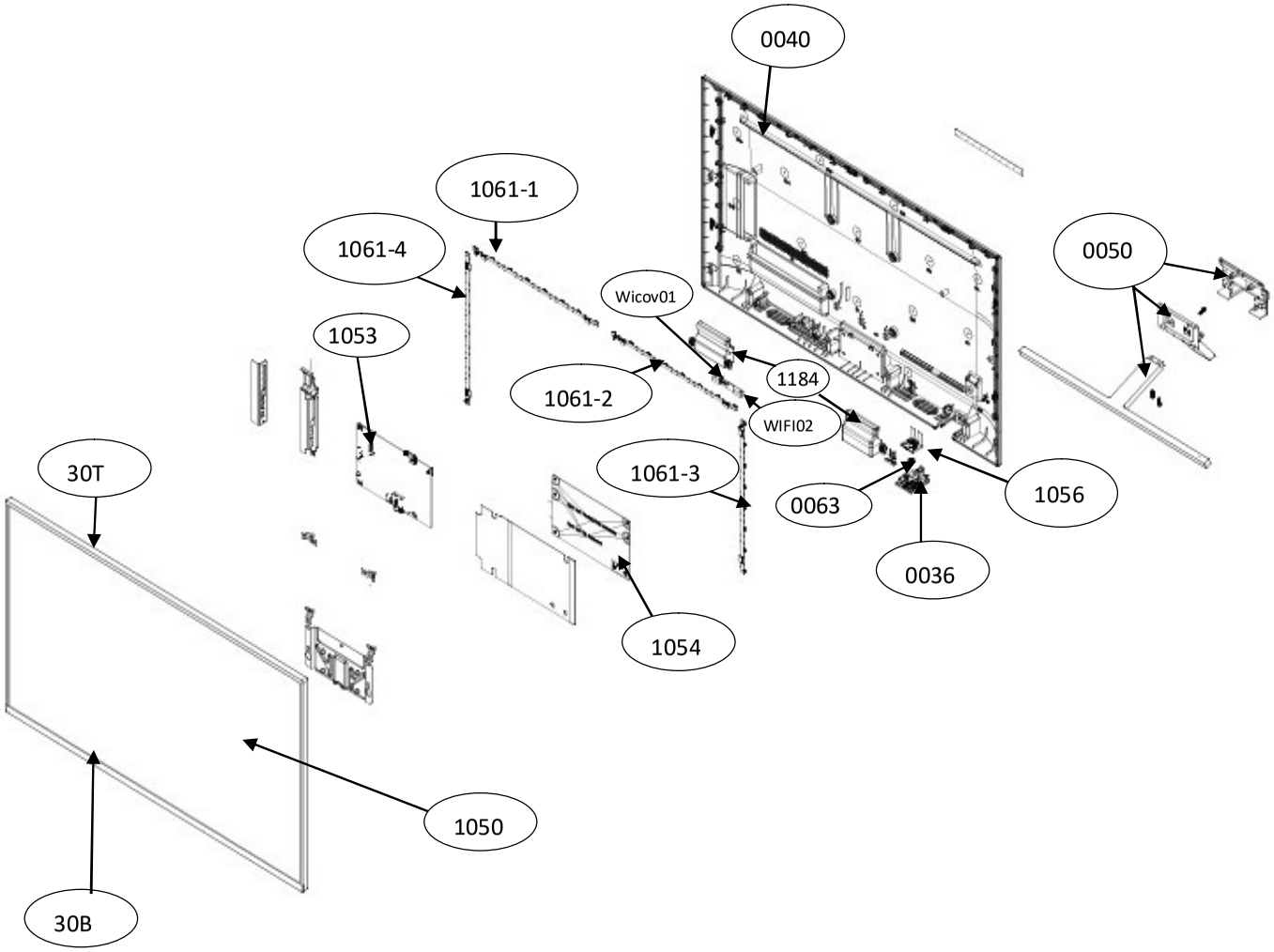

Pos NO	Description	Remark
30B	BEZEL ASSY-D	
30T	bezel plastic front-U	
36	LENS	
40	REAR COVER	
50	CENTRAL STAND (Neck Base & Screws included)	
63	KEY_FUNCTION	
1050	LCD PANEL	
1053	MAINB BOARD	
1054	POWER BOARD	
1056	IR BOARD	
1061-1	AMBI-LIGHT BOARD	
1061-2	AMBI-LIGHT BOARD	
1061-3	AMBI-LIGHT BOARD	
1061-4	AMBI-LIGHT BOARD	
1176	REMOTE PHILIPS	Not displayed
1184	Speaker	
Wicov01	COVER_CONNECTOR	
WiFi02	WIFI/BT USB	