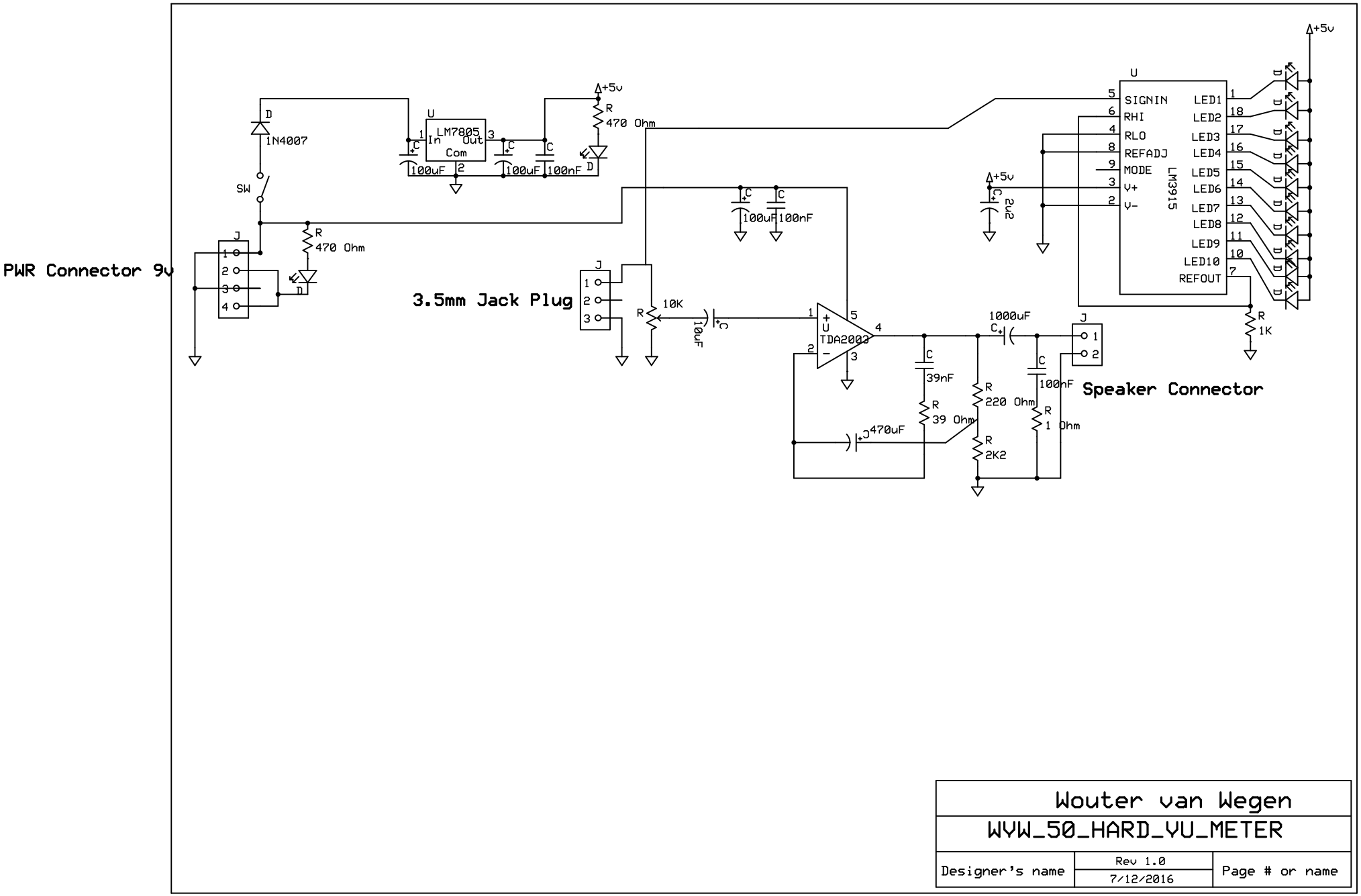

F:\WVW_PCB_DESIGN\WVW_50_HARD_VU_METER\WVW_50_HARD_VU_METER-V3.sch - Sheet1