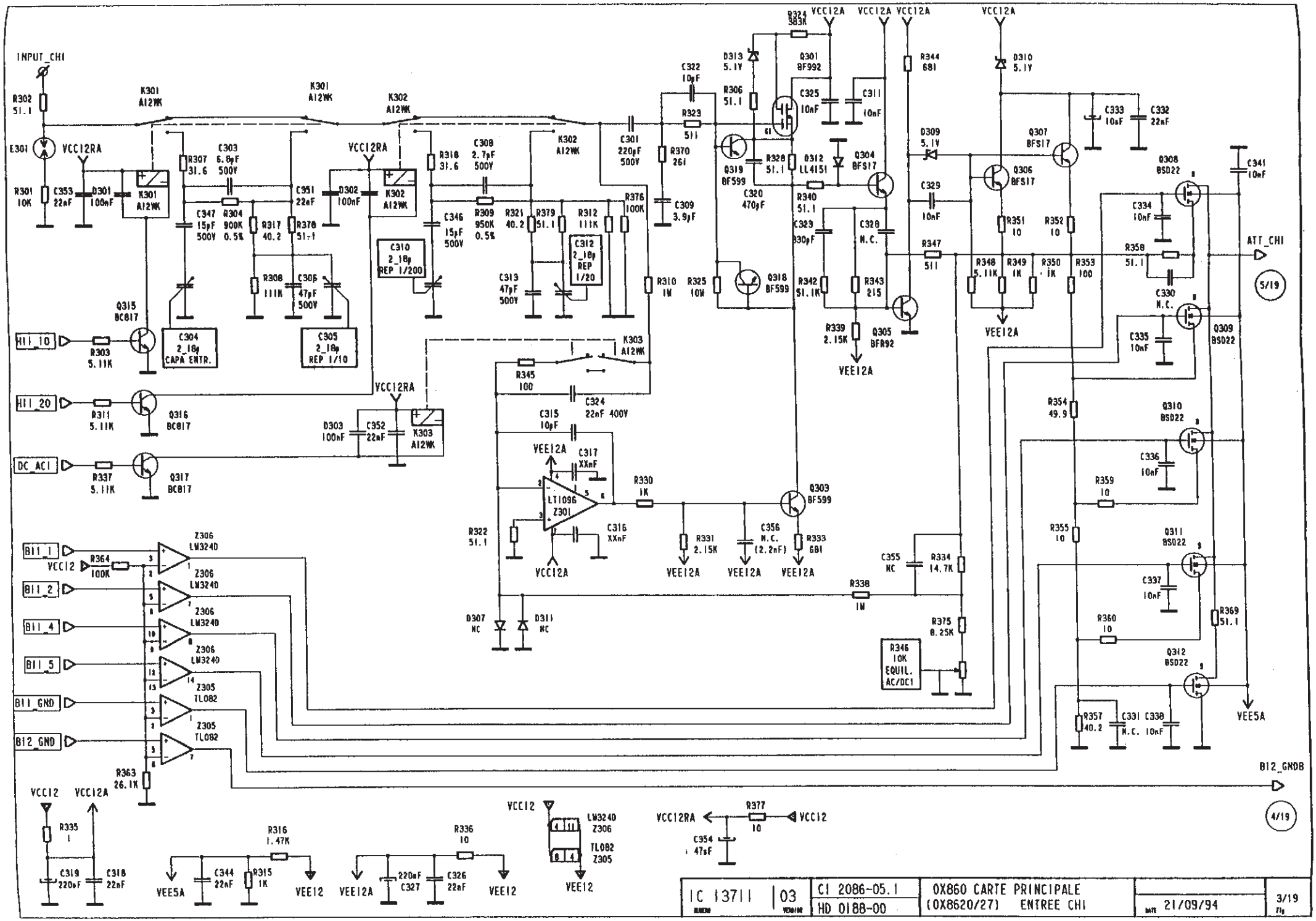
INPUT_CHI
ATT_CHI
5/19
B12_GNDB
4/19
VEE5A
VEE12A
VCC12A
VCC12RA
VCC12
VEE12
HI_10
HI_20
DC_ACI
BI1_1
BI1_2
BI1_4
BI1_5
BI1_GND
B12_GND
K301 AI2WK
K302 AI2WK
K303 AI2WK
Q301 BF992
Q303 BF599
Q304 BFS17
Q305 BFR92
Q306 BFS17
Q307 BFS17
Q308 BSD22
Q309 BSD22
Q310 BSD22
Q311 BSD22
Q312 BSD22
Q315 BC817
Q316 BC817
Q317 BC817
Q318 BF599
Q319 BF599
Z301 LT1096
Z305 TL082
Z306 LM324D
C304 2_18p CAPA ENTR.
C305 2_18p REP 1/10
C310 2_18p REP 1/200
C312 2_18p REP 1/20
R346 10K EQUIL. AC/DC1
IC 13711
03
CI 2086-05.1
HD 0188-00
OX860 CARTE PRINCIPALE
(OX8620/27) ENTREE CHI
21/09/94
3/19