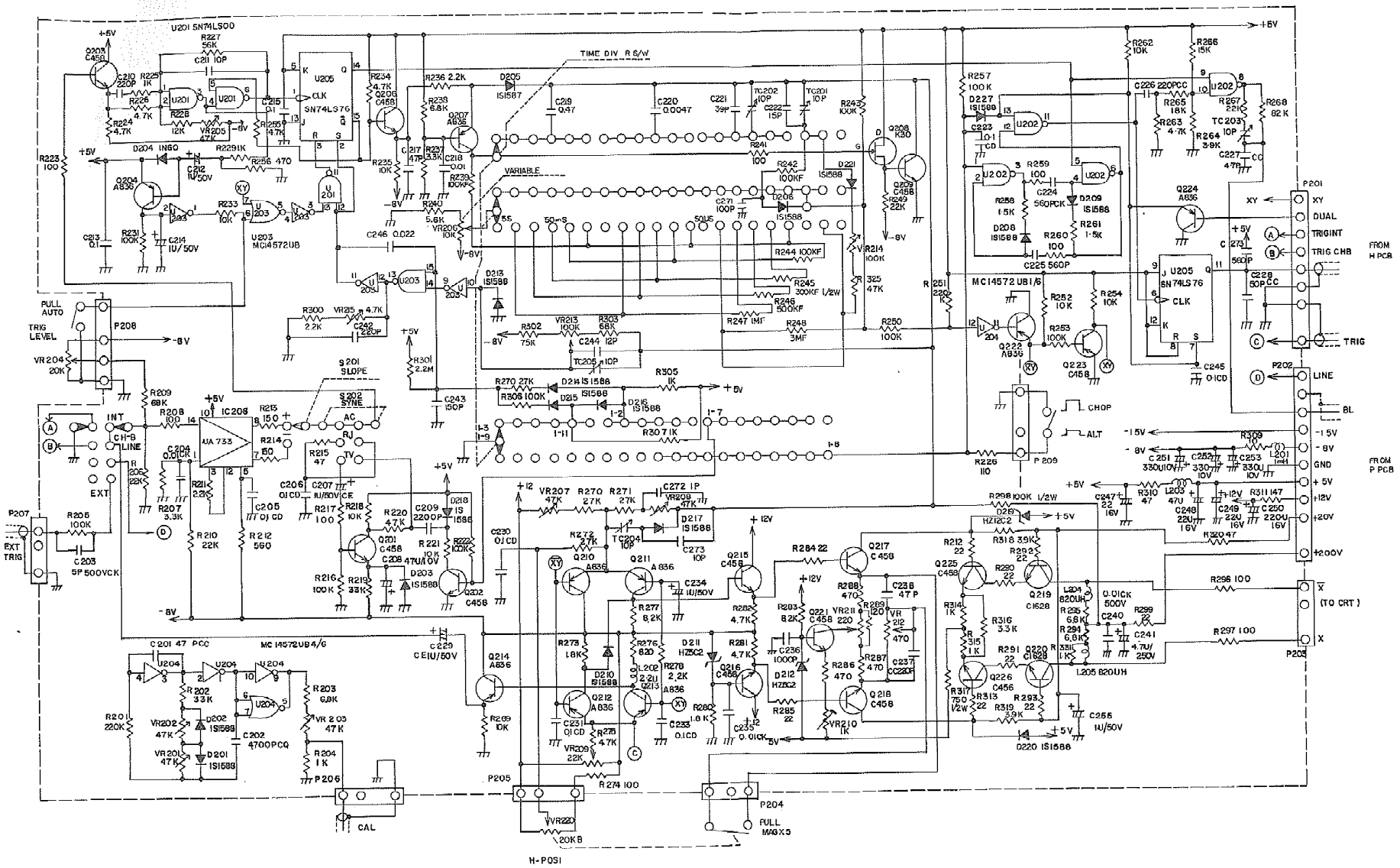
U201 SN74LS00
U205 SN74LS76
U203 MC14572UB
MC14572UB1/6
MC14572UB4/6
IC206 μA 733
TIME DIV R S/W
VARIABLE
P201
P202
P203
P204
P205
P206
P207
P208
P209
XY
DUAL
TRIGINT
TRIG CHB
TRIG
LINE
BL
-15V
-8V
GND
+5V
+12V
+20V
+200V
X
(TO CRT)
FROM H PCB
FROM P PCB
PULL AUTO
TRIG LEVEL
EXT
EXT TRIG
CH-B LINE
INT
S201 SLOPE
S202 SYNE
AC
TV
CHOP
ALT
CAL
H-POSI
PULL MAGX5