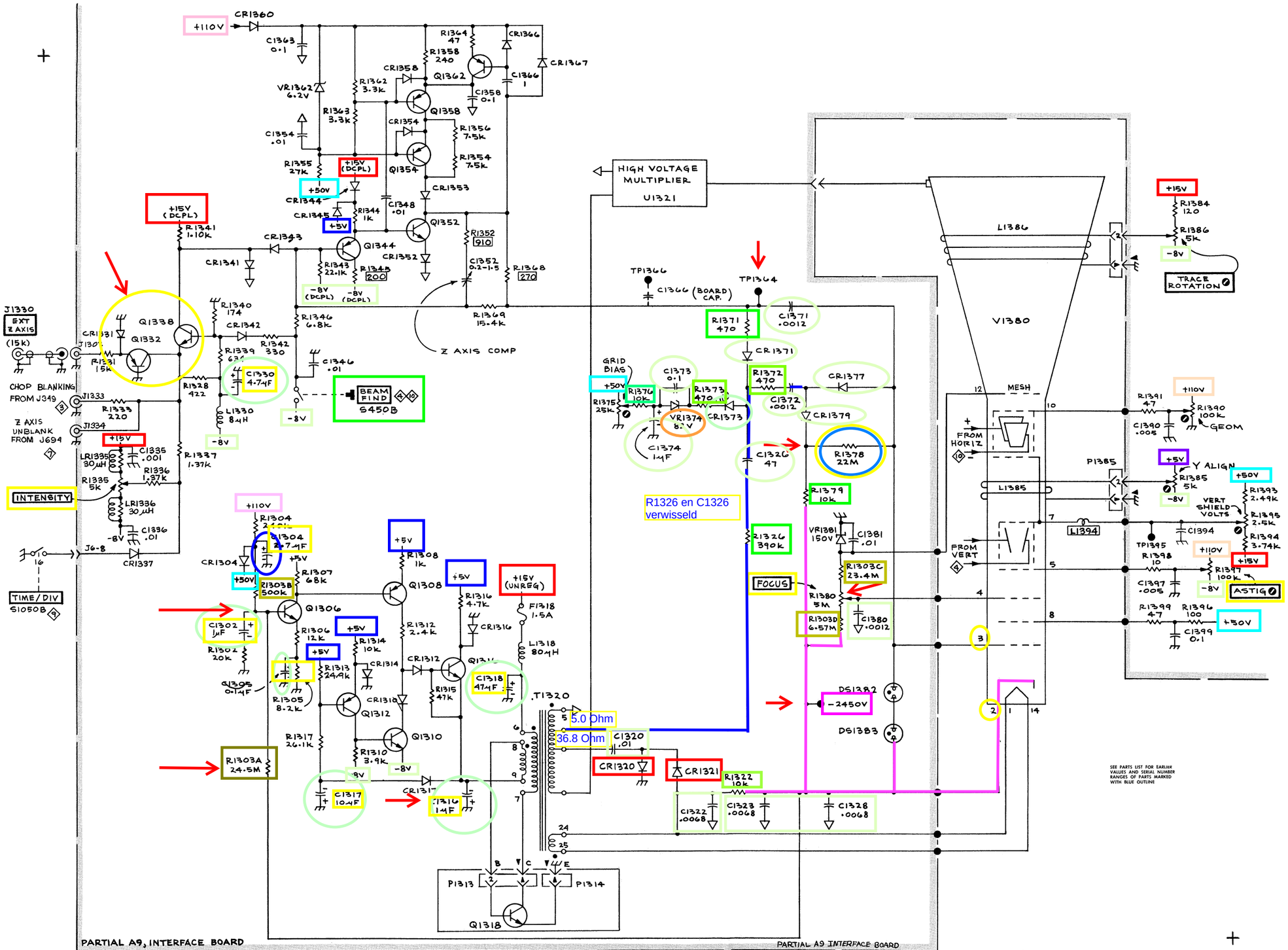

Scans by ArtekMedia => 2010